MDP-315/515D

SERVICE MANUAL

AEP Model
MDP-315/515D

Australian Model
MDP-515D

photo: MDP-515D

SPECIFICATIONS

Type CD/CDV/LD Player
Signal readout Optical (Laser beam reflection)
Signal format CCIR standard, PAL color system
EIA standard, NTSC color system (Note)

Playing time (Note)

			PAL	NTSC
LD	CAV	30 cm (12 in) double-sided	72	60
		20 cm (8 in) double-sided	32	28
		20 cm (8 in) single-sided	–	14
	CLV	30 cm (12 in) double-sided	120	120
		20 cm (8 in) double-sided	40	40
		20 cm (8 in) single-sided	–	20
CDV		Audio portion	20	20
		Video portion	6	5
CD		12 cm (5 in) single-sided	74	74
		8 cm (3 in) single-sided	20	20

(minutes)

[Note] MDP-515D only

Digital audio specifications

Frequency response
4 Hz to 20 kHz (± 0.3 dB)
Signal-to-noise ratio
More than 105 dB (EIAJ*)
Dynamic range More than 95 dB (EIAJ*)
Total harmonic distortion
0.003% or less (EIAJ* at 1 kHz)
Channel separation
More than 95 dB (EIAJ*)
Wow and flutter Below measurement limit
(± 0.001% W.PEAK) (EIAJ*)

* Measurement by under condition of standards of Electric Industries Association of Japan (VTC-015)

Horizontal video resolution
PAL 440 lines
NTSC 425 lines

Input/output

Video output 1.0 Vp-p, 75 ohms, unbalanced
RGB output 0.7 Vp-p
Audio output Analog: 200 mVrms (1 kHz, 40% modulation)
Digital: 200 mVrms (1 kHz, –20 dB)
Headphone output
28 mW (32 ohms), 8 ohms
Power requirements
Model for Continental Europe:
220 V AC, 50/60 Hz
Model for the United Kingdom:
240 V AC, 50/60 Hz

MDP-315:

Power consumption
33 watts
Weight Approx. 7.7 kg (16 lb 12 oz)
Dimensions Approx. 430 × 110 × 400 mm (w/h/d)
(17 × 4³/₈ × 15³/₄ inches)
Operating temperature
+5°C to +35°C
Ambient humidity 5% to 90%

MDP-515D:

Power consumption
40 watts
Weight Approx. 7.9 kg (16 lb 23 oz)
Dimensions Approx. 430 × 110 × 408 mm (w/h/d)
(17 × 4³/₈ × 16¹/₈ inches)
Operating temperature
+5° C to +35° C
Ambient humidity 5% to 90%

—Continued on page 2—

- **SERVICE OF REMOTE COMMANDER RMT-515D**

Remote commander RMT-515D is available as a unit. But as individual parts the battery case lid of commander is only available.

MICROFILM

CD VIDEO CD/CDV/LD/PLAYER
SONY®

www.hifiengine.com

Remote Commander RMT-515D

Principle of operation	Infrared pulse
Power requirements	3 V DC, (2 IEC R6 size AA batteries)
Dimensions	Approx. 62 × 20 × 175 mm (w/h/d) ($2^{7}/_{16} \times {}^{3}/_{4} \times 7$ inches)
Weight	Approx. 130 g (including batteries) (4.5 oz)

Supplied accessories

Remote Commander RMT-515D (1)
IEC R6 (size AA) batteries (2)

Precautions

On safety

- Before operating, check that the operating voltage of the unit is identical to that of your local power supply.
- Should any solid object or liquid enter the cabinet, unplug the unit and have it checked by qualified personnel before operating it any further.
- Unplug the unit from the wall outlet if it is not to be used for an extended period of time.
  To disconnect a cord, pull it out by the plug. Never pull the cord itself.

On installation

- Avoid placing the player in a location subject to:
  - high humidity
  - high temperature
  - excessive dust
  - mechanical vibration
  - direct sunlight
- Allow adequate air circulation to prevent internal heat build-up. Do not place the unit on surfaces (rugs, blankets, etc.) or near materials (curtains, draperies) that may block the ventilation holes.

On moisture condensation

Do not operate the unit right after having transported it from a cold location to a warm location or in a room where the temperature rises suddenly, because moisture may condense in the operating section of the unit. Wait for about an hour before turning the power on in the new location or keep the rise in room temperature gradual. If the unit is operated with moisture condensation, the unit and the disc may be damaged. Therefore remove the disc immediately when there is a possibility of moisture condensation and no picture is obtained. To evaporate the moisture rapidly, leave the player turned on without a disc loaded.

On operation

- When turning off the power, wait until "no disc" message appears after a disc has been removed and the tray has been closed. Especially, this must be practiced when the player is to be transported.
- Remove the disc from the tray after playing it, if the unit will not be used for any length of time. Do not transport the set with a disc in place.
- When the disc tray is in the open position, do not press down on it strongly, or place heavy objects on it.

On cleaning

Clean the cabinet, panel and controls with a dry soft cloth, or a soft cloth lightly moistened with a mild detergent solution. Do not use any type of solvent, such as alcohol or benzine, which may damage the finish.

On repacking

Do not throw away the carton and the packing material. They make an ideal container to transport the unit in.

On disc tray

- If the disc tray does not close properly and slides out again, reinsert the disc.
- Be careful not to pinch your fingers between the tray and the unit.
- Always keep the tray closed when not using the unit to keep dust or dirt from entering the optical system of the unit.
- If the unit does not operate, press the ⏏ OPEN/CLOSE button and reinsert the disc.
- Insert only one disc at a time.
- Make sure the disc is placed properly in the tray. Incorrect positioning may result in permanent damage to the disc.

If you have any question or problem concerning your unit, please contact your nearest Sony dealer.

SAFETY-RELATED COMPONENT WARNING!!

COMPONENTS IDENTIFIED BY MARK ⚠ OR DOTTED LINE WITH MARK ⚠ ON THE SCHEMATIC DIAGRAMS AND IN THE PARTS LIST ARE CRITICAL TO SAFE OPERATION. REPLACE THESE COMPONENTS WITH SONY PARTS WHOSE PART NUMBERS APPEAR AS SHOWN IN THIS MANUAL OR IN SUPPLEMENTS PUBLISHED BY SONY.

www.hifiengine.com

PROTECTION OF EYES FROM LASER BEAM DURING SERVICING

This set employs a laser. Therefore, be sure to follow carefully the instructions below when servicing.

WARNING !!

WHEN SERVICING, DO NOT APPROACH THE LASER EXIT WITH THE EYE TOO CLOSELY. IN CASE IT IS NECESSARY TO CONFIRM LASER BEAM EMISSION, BE SURE TO OBSERVE FROM A DISTANCE OF MORE THAN 25 cm FROM THE SURFACE OF THE OBJECTIVE LENS ON THE OPTICAL PICK-UP BLOCK.

1. Laser Diode Properties
   - Material: GaAlAs
   - Wavelength: 780 nm
   - Emission Duration: continuous
2. During service, do not take the Optical Pick-up Block apart, and do no adjust the APC circuit. If there is a breakdown in the APC circuit (including laser diode), replace the entire Optical Pick-up Block (including APC board).

DANGER
Invisible laser radiations when open and interlock failed or defeated.
Avoid direct exposure to beam.

CLASS I LASER PRODUCT

ADVARSEL:
USYNLIG LASERSTRÅLING VED ÅBNING NÅR SIKKERHEDSAFBRYDERE ER UD AF FUNCTION UNDGÅ. UDSAETTELSE FOR STRÅLING.

CLASS 3B LASER

VAROITUS!
SUOJAKOTELOA EI SAA AVATA. LAITE SISÄLTÄÄ LASERDIODIN, JOKA LÄHETTÄÄ (NÄKYMÄTÖNTÄ)
SILMILLE VAARALLISTA LASERSÄTEILYÄ.

LASER COMPONENT IN PRODUCT IS CAPABLE OF EMITTING RADIATION EXCEEDING THE LIMIT FOR CLASS I.

www.hifiengine.com

TABLE OF CONTENTS

Section	Title	Page
1.	GENERAL	
	Location and Function of Controls(MDP-315)	6
	Location and Function of Controls(MDP-515D)	7
	Remote Commander	8
	Rear panel	9
	To Play a Disc	
	Starting Playback	10
	Advanced PlayBack	10
	To Change PLayback Speed and Direction-Speed Playback	11
	To Play Frame by Frame-Freeze-Frame, Step Playback	11
	To Search for a Particular Scene	
	Scan Function	12
	Chapter/Track Search	12
	Frame Search	13
	Time Search	13
	To Play Particular Portions of a Disc	
	Repeat Playback	14
	Program Playback	14
	To Search paticular Track	15
	To Change Time Display	15
	Auto Pause (MDP-515D only)	16
	Auto Space (MDP-515D only)	16
	Custom Index	16
2.	DISASSEMBLY	
2-1.	Removal of the Cabinet	17
2-2.	PULL out the Tray to Manual	17
2-3.	Removal of Tray	17
2-4.	Aligiment of Loading Gear Phase	18
2-5.	Opening of MP-15 Board	18
2-6.	Removal of Optical Device	19
2-7.	Removal of MD Chassis and OPT.Chassis	19
2-8.	Removal of Turntable, Spindle Motor, SV-33 Board and FG-13 Board	19
3.	DIAGRAMS	
3-1.	Circuit Boards Location	20
3-2	Overall Block Diagram	21
3-3	Video Block Diagram	24
3-4	RF Amp Block Diagram	27
3-5	Analog Audio Block Diagram	29
3-6	System Contorol Block diagram	31
3-7	Servo Block Diagram	35
3-8	Digital Audio Block Diagram	38
3-9	Mode Contorol/Function Switch Block Diagram	41
3-10.	Power Block Diagram	43
4.	PRINTED WIRING BOARDS AND AND SCHEMATIC DIAGRAMS	
4-1.	Frame Schematic Diagram	45
4-2.	Printed Wiring Boards and Schematic Diagrams	48
	MP-15, TL-40(Video) and RG-6(MDP-515D) Boards	51
	MP-15(Digital Audio, Audio output), HP-50, AF-52 Boards	61
	MP-15, (System Control, Spindle Servo), SW-106, LS-17, SW-107 and MT-29 Boards	71
	SV-33(Servo), FG-13, CK-14, MT-30 and MT-28 Boards	79
	FP-197, FP-198(MDP-315) and FP-222, FP-223(MDP-515D) Boards	87
	PS-193, TR-30 Boards	95
4-3.	Semiconductors	99
5.	EXPLODED VIEWS	
5-1.	EXTERIOR ORNAMENT Assembly	100
5-2.	Frame Assembly-1	101
5-3.	Frame Assembly-2	102
5-4.	MD Chassis Assembly (1)	103
5-5.	MD Chassis Assembly (2)	104
6.	ELECTRICAL PARTS LIST	105
	HARDWARE LIST	128

www.hifiengine.com

7. ELECTRICAL ADJUSTMENTS

1-1. List of Servicing Jigs ····· 129
1-2. Cautions on Adjustment ····· 129
1-3. MD Adjustment Cable (J-6082-059-A) ····· 129
1-4. Power Supply Check (PS-193 Board) ····· 130
1-5. System Control System Adjustment ····· 130
1-5-1. Microprocessor Clock (PAL)Adjustment ····· 130
1-5-2. Microprocessor Clock (NTSC)Adjustment ····· 130
1-6. Servo System Adjustment ····· 130
1-6-1. LD Servo System Adjustment
1. LD Tracking Balance Adjustment (SV-33 Bord) ····· 131
2. LD Focus Gain Adjustment (SV-33 Board) ····· 132
3. LD Cross Talk Balance Adjustment ····· 133
4. LD Tracking Gain Adjustment (SV-33 Board) ····· 134
1-6-2. CD Servo System Adjustment ····· 135
1. RD Adjustment ····· 135
2. CD Focus Balance Adjustment (SV-33 Board) ····· 135
3. CD RF H Level Adjustment (SV-33 Board) ····· 136
4. CD RF L Level Adjustment (SV-33 Board) ····· 136
1-7. Video System Adjustment
1-7-1. Video Output Level Adjustment (MP-15 Board) ····· 137
1-7-2. Burst Gate position Adjustment (MP-15 Board) ····· 137
1-7-3. REF H Adjustment ····· 137
1-7-4. Color Framimg Y Level Adjustment (MP-15 Board) ····· 138
1-7-5. Color Framing Chroma Level (1) Adjustment (MP-15 Board) ····· 138
1-7-6. Color Framing Chroma Level (2) Adjustment (MP-15 Board) ····· 139
1-7-7. Color Framing REF H Adjustment (MP-15 Board) ····· 139
1-7-8. Input Level(PAL)Adjustment (RG-6 Board) ····· 139
1-7-9. Input Level(NTSC)Adjustment (RG-6 Board)····· 140
1-7-10. BF Position Adjustment (RG-6 Board) ····· 140
1-7-11. Video Level(NTSC)Adjustment (RG-6 Board) ···· 141
1-7-12. G Level Adjustment (RG-6 Board) ····· 141
1-7-13. B Level Adjustment (RG-6 Board) ····· 141
1-7-14. Video Level(PAL) Adjustment (RG-6 Board) ···· 141
1-7-15. Free-Run Frequency(PAL)Adjustment (RG-6 Board) ····· 142
1-7-16. Free-Run Frequency(NTSC)Adjustment (RG-6 Board) ····· 142
1-7-17. Chroma Level Adjustment (RG-6 Board) ····· 142
1-7-18. HUE Adjustment (RG-6 Board) ····· 142
1-7-19. DL Amplifire Gain Adjustment (RG-6 Board) ··· 143
1-7-20. DAT Adjustment (RG-6 Board) ····· 143
1-8. Audio System Adjustment
1-8-1. Analog Audio System Adjustment (AF-52 Board)· 144
1-8-2. Digital Audio System Adjustment(MP-15Board)·· 144
1-8-3. RF PLL Free-Run Adjustment (MP-15 Board) ···· 145

ADJUSTMENT RELATED PARTS LOCATION ····· 146

www.hifiengine.com

SECTION 1
GENERAL

This section is extracted instraction manual.

Location and Function of Parts and Controls (MDP-315 Model)

Refer to the page indicated in the black circle for details.

A-1

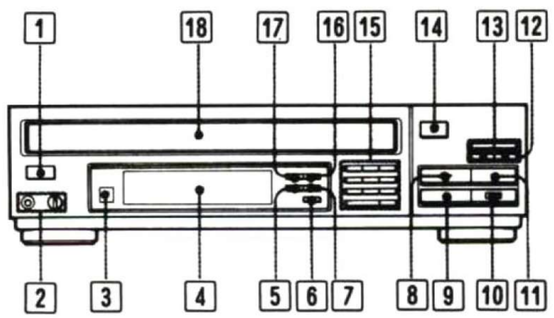

A-2

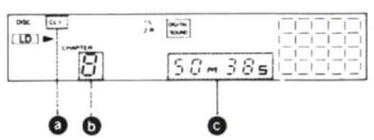

A-3

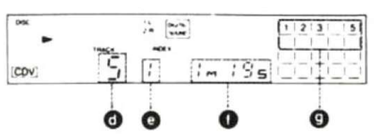

A-4

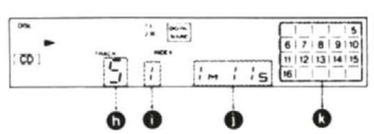

Front Panel

A-1

Buttons on the Remote Commander with the same indications as those of the main unit have the same function.

1 **POWER switch**
Press to turn on and press again to turn off the player.

2 **PHONES jack (stereo phone type) and LEVEL control**
When listening with headphones, connect the headphones with stereo phone plug here. Adjust the volume with the LEVEL control.

3 **Remote control sensor**
Point the supplied Remote Commander here.

4 **Display window**
When playing back a disc, the following indications appear on the display.

A-2

LD
a Type of LD
b Chapter number
c Time (hr./min./sec.) or frame number

A-3

CDV
d Track number
e Index
f Elapsed time (min./sec.) for track
g AV calendar

A-4

CD
h Track number
i Index
j Elapsed time (min./sec.) for track
k AV calendar

5 **AV TIME button** ㉕
Press to change time display.

6 **Repeat button** ㉒
Press to repeat the entire disc side, and for other repeat play.

7 **V.PART/A.PART (video/audio selector button)** ⑬
Press to locate the video portion of a CDV disc.

8 **▶ Play button**

9 **■ Stop button**

10 **STOP MODE MEMORY switch** ⑮
Use this switch to stop playback and resume at the same point later. This switch is effective for LD only.

11 **II Pause button**

12 **ACS/AMS ⏮/⏭ (Automatic Chapter Select/ Music Sensor) buttons** ⑲ ㉗
Use these buttons for skipping chapter/track.

13 **DUAL SPEED ⏪/⏩ buttons** ⑱
Use these buttons for scanning.

14 **⏏ Disc tray OPEN/CLOSE button**
Press to open or close the disc tray.

15 **Number/file search (1-9/A-F) buttons**
These are used for entering program, chapter, track, frame, time numbers and File A-F.

16 **INDEX button** ㉚
Use this button for custom index search.

17 **FILE button** ㉚
Use this button for setting a custom index mark.

18 **Disc tray**

Accessories

The following accessories are included in the carton.

RMT-515D Remote Commander

Two IEC R6 (size AA) batteries

www.hifiengine.com

Location and Function of Parts and Controls

(MDP-515D Model)

Refer to the page indicated in the black circle for details.

A-1

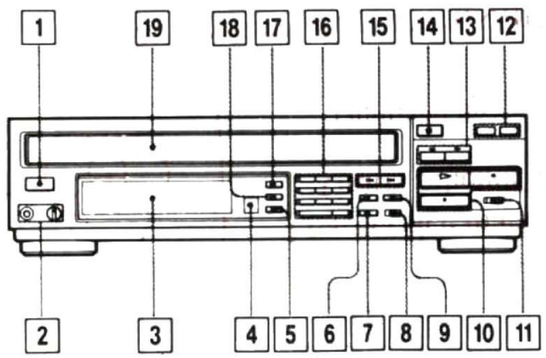

A-2

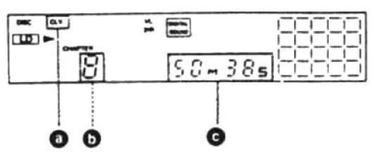

A-3

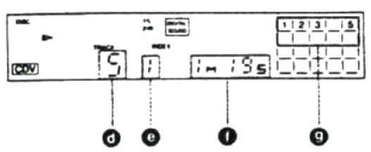

A-4

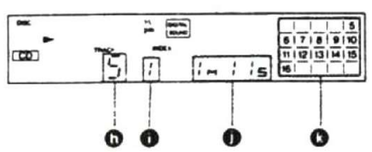

Front panel

A-1

Buttons on the Remote Commander with the same indications as those of the main unit have the same function.

1 **POWER switch**
Press to turn on and press again to turn off the player.

2 **PHONES jack (stereo phone type) and LEVEL control**
When listening with headphones, connect the headphones with stereo phone plug here. Adjust the volume with the LEVEL control.

3 **Display window**
When playing back a disc, the following indications appear on the display.

A-2

LD
- a Type of LD
- b Chapter number
- c Time (hr./min./sec.) or frame number

A-3

CDV
- d Track number
- e Index
- f Elapsed time (min./sec.) for track
- g AV calendar

A-4

CD
- h Track number
- i Index
- j Elapsed time (min./sec.) for track
- k AV calendar

4 **Remote control sensor**
Point the supplied Remote Commander here.

5 **AV TIME button** 25
Press to change time display.

6 **Repeat button** 22
Press to repeat the entire disc side, or for other repeat playback.

7 **1/ALL button** 22 26
Press to repeat the single track or chapter.

8 **RGB selector**
When the player is connected to the TV via the EUROCONNECTOR, set to ON to view an NTSC disc on a PAL TV. The TV can be set to receive the RGB signal.
When your TV is equipped with the RGB or composite signal selector, setting the TV to receive the RGB signal may be performed on the TV itself.
Set to OFF when your TV is capable of receiving both PAL and NTSC.

Notes
- When the TV is set to the RGB mode, the picture brightness may change.
  In this case, adjust the brightness on the TV.
- When this selector is set to ON, the picture may shift slightly to the left.

9 **V.PART/A.PART (video/audio selector button)** 13
Press to locate the video portion of a CDV disc.

10 **Basic operation buttons**
- ▶ Play button
- ■ Stop button
- ❚❚ Pause button

11 **STOP MODE MEMORY switch** 15
Use this switch to stop playback and resume at the same point later. This switch is effective for LD only.

12 **PAL/NTSC indicator**
This unit automatically distinguishes PAL or NTSC and turns on the respective indicator.
When the power is turned on, the PAL indicator lights up first, even if an NTSC disc has been inserted. After an NTSC disc rotates for a while, the NTSC indicator lights up and keeps on lighting until the disc is removed or the power is turned off.

13 **DUAL SPEED / buttons** 18 24
Use these buttons for scanning.

14 **⏏ Disc tray OPEN/CLOSE button**
Press to open or close the disc tray.

15 **ACS/AMS ⏮/⏭ (Automatic Chapter Select/Music Sensor) buttons** 19 24
Use these buttons for skipping chapter/track.

16 **Number/file search (A-F) buttons**
These are used for entering program, chapter, track, frame, time numbers and File A-F.

17 **FILE button** 30
Use this button for setting a custom index mark.

18 **INDEX button** 30
Use this button for custom index search.

19 **Disc tray**

Accessories

The following accessories are included in the carton.

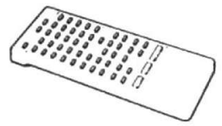

RMT-515D Remote Commander

IEC R6 (size AA) batteries (2)

www.hifiengine.com

Location and Function of Parts and Controls

Remote Commander

B-1

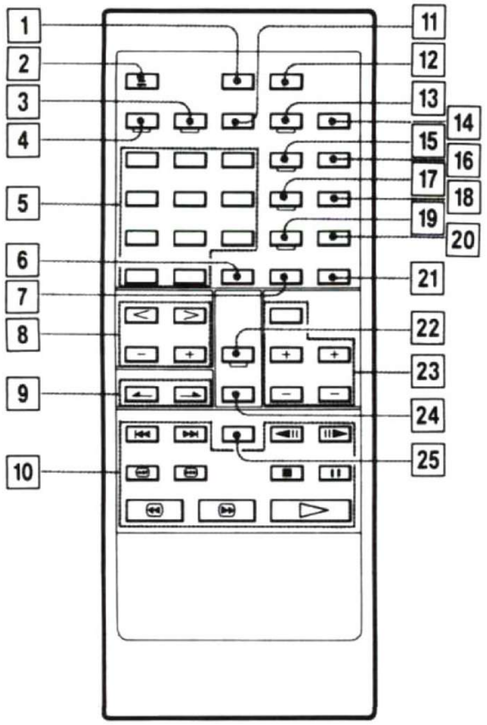

B-1

Buttons on the Remote Commander with the same indications as those of the main unit have the same function.

1 **DISPLAY button**
Press during playback to superimpose the screen messages (see page 13) on the monitor screen. Press again to remove the message.

2 **≜ Disc tray OPEN/CLOSE button**
Press to open or close the disc tray.

3 **FRAME/TIME search button** ⓴ ㉑

4 **PGM (program play) button** ㉓

5 **Number/file search (A-F) buttons**
These are used for entering program, chapter, track, frame, time numbers and File A-F.

6 **SEARCH/NEXT button** ⓴ ㉑

7 **BACK button** ㉓ ㉗

8 **</> MULTI SPEED buttons** ⓰
+/– SPEED SET buttons ⓰

9 **—/— Index buttons**
While playing back a CD, press — to advance the index or — to revert it.

10 **Basic operation buttons**
⏮/⏭ ACS/AMS (Automatic Chapter Select/Music Sensor) buttons
◀◀◀ (◀◀◀)/(▶▶▶) ▶▶▶ (High-speed scan) buttons
◀◀ (◀◀)/(▶▶) ▶▶ (Scan) buttons
◀ II/II ▶ STILL/STEP playback buttons
■ STOP button
II PAUSE button
▶ PLAY button

11 **CLEAR button**
Press to cancel a wrong numerical entry or to terminate the search or other functions currently in operation. (The functions affected are marked on the Remote Commander with yellow underlines.)

12 **DISC/TV button**
When the player is connected to the TV via the EUROCONNECTOR, press to monitor TV programmes. Press again to return to disc viewing.

13 **REPEAT button** ㉒
Press to repeat the entire disc side, or for other repeat playback.

14 **CX button** ⓯
Press to manually activate the CX noise reduction system.

15 **1/ALL button** ㉒
Press to repeat the single track or chapter.

16 **ANALOG audio button** ⓯
Use this button to switch between digital and analog sound on an LD of NTSC video signal system.

17 **SHUFFLE button**
Press to play back selections on a CD, CDV, and LD with TOC in a random order.

18 **AUDIO MONITOR button** ⓯
Press to switch the audio channels of a disc in the order of stereo, 1L, and 2R.

19 **REPEAT A ### B button** ㉒
Press to repeat the particular portion.

20 **A.(Automatic) PAUSE/A. (Automatic) SPACE button** ㉓ ㉕

21 **AV TIME button** ㉕
Press to change time display.

22 **FILE button** ㉚
Use this button for setting a custom index mark.

23 **TV operation buttons**
(Can be used to control Sony TV sets bearing the R mark.)
PROGR. (program) +/– buttons
◁ (volume) +/– buttons
⊖ button
Press to switch to a video recorder connected to the video/audio inputs of the TV set. (This function is available only with certain TV models.)

24 **CUSTOM INDEX button** ㉚
Use this button for custom index search.

25 **V.PART/A.PART button** ⓮
Press to locate the video portion of a CDV disc.

Precautions on the Remote Commander

- Do not let strong sunlight or a strong artificial light source shine directly on the remote sensor, as it may interfere with the operation or damage the sensor.
- Connecting the Control S input jack on the rear of the unit to the Control S output jack on a TV set or other piece of equipment deactivates the sensor on the front and shifts operation to the sensor on the other equipment. In this case, point the Remote Commander at the latter equipment's sensor and not at the disc player.

Installing batteries

1 Open the lid.

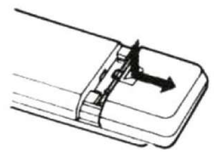

2 Insert the two IEC R6 (size AA) batteries with correct polarity.

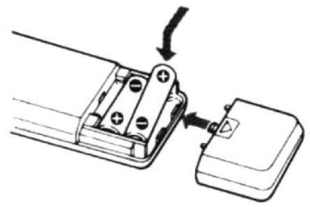

Battery life

Batteries should last for about six months under normal operating conditions. When the operating range of the Remote Commander becomes noticeably short, replace the batteries with new ones.

Note

When the Remote Commander is not to be used for a long period of time, remove the batteries to avoid possible damage from battery leakage.

www.hifiengine.com

Location and Function of Parts and Controls

Rear Panel

C-1

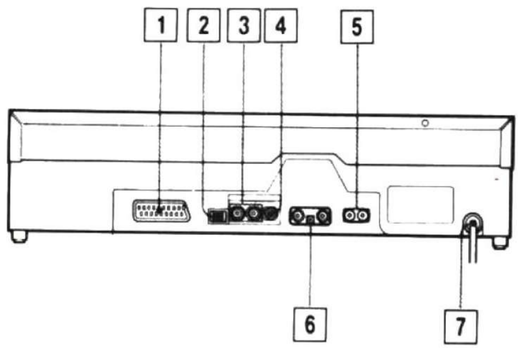

C-1

1 **EUROCONNECTOR** (21-pin)
Connect to the 21-pin connector of a VTR or a TV, or to the audio/video input of these units with a commercially available connecting cable.

2 **DIGITAL OUT connector**
This jack permits optical fiber connection to an amplifier or D/A converter unit with optical input. For connection, use the optional audio fiber cable POC-15. (OPTICAL)

3 **LINE OUT AUDIO L, R jacks** (phono jacks)
Connect to the audio input jacks of a TV set or the AUX input jacks of an amplifier. The output signal is the same–that is, digital or analog–as that recorded on the disc.

4 **LINE OUT VIDEO jack** (phono jack)
Connect to the video input jack of a TV set or VTR.

5 **CONTROL S IN/OUT jacks** (mini jacks)
Connect the IN jack to the CONTROL S OUT jack on a TV set and the OUT jack to the CONTROL S IN jack on a VTR.
- These connections permit the control of the player and the VTR using the remote sensor on the TV.
- Attaching the CONTROL S IN jack to the CONTROL S OUT jack on a TV set with the optional RK-G69 connecting cord allows you to operate the player by pointing the Remote Commander at the TV set instead of at the player.

6 **VIDEO OUT jack** (phono jack)
AUDIO OUT (MONO) jack (phono jack)
RFU DC OUT jack (mini jack)
Connect to a TV with the only aerial input using the optional RFU-89EA RF modulator.

7 **AC power cord**

Screen Messages

Information on the operating condition of the unit and chapter or track numbers can be superimposed on the TV or monitor screen. While no image is displayed, such as during search, information while playing back a PAL disc and a CD is shown on a blue background and information while playing back an NTSC disc is shown on a green background.

LD

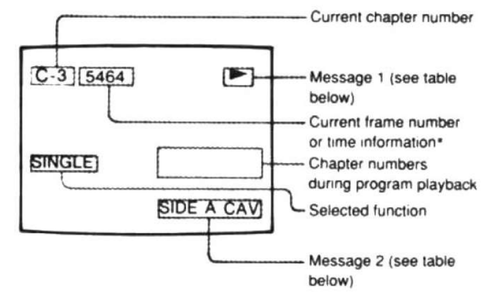

* If seconds are not recorded on the disc, only "0:22" is shown.

CD

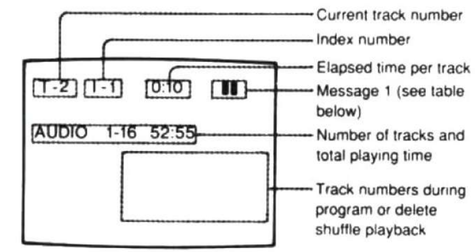

CDV

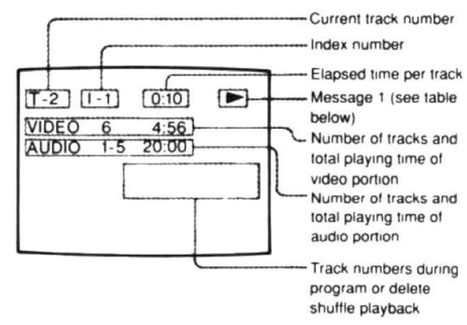

To turn on the screen message

Press the button again to turn the message off.

Message 1 (Examples)

Display	Explanation
OPEN	Disc tray open
CLOSE	Disc tray close
▶	Playback
■	Stop
❚❚	Pause
⏩/⏪	Forward/reverse speed scan
SEARCH	Search
▶ × 1/2	1/2 speed display in forward direction

Message 2 (Examples)

Display	Explanation
SIDE A CAV	Standard-play disc side A
SIDE B CAV	Standard-play disc side B
SIDE A CLV	Extended-play disc side A
SIDE B CLV	Extended-play disc side B
1L	Main soundtrack/left channel
2R	Second soundtrack/right channel
♪ DIGITAL	Digital sound
♪ ANALOG	Analog sound

LD precaution

Some discs do not contain the side A or B identification code. In this case, the disc side indication may not be correct.

www.hifiengine.com

To Play a Disc

Starting Playback

To play an NTSC disc, connect the player and a TV via EUROCONNECTOR.

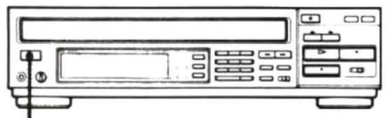

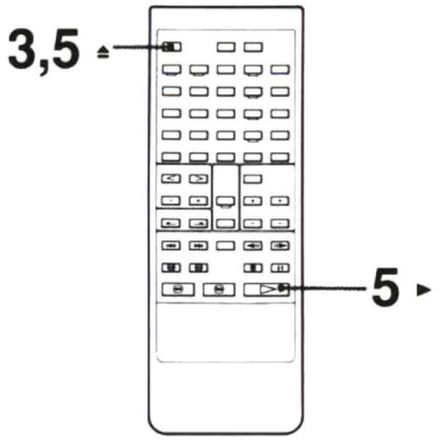

1 Turn on the TV and stereo system.
TV: Select the channel used for videodisc playback or the video input. (See page 11.)
Stereo system: Turn on the amplifier or the receiver and select the proper audio input.

2 Press POWER to turn on the player.

3 Press ≜ OPEN/CLOSE to open the disc tray.

4 Place the disc on the tray.
Place the disc on the center of the tray. If the disc is not placed correctly, playback may not start.

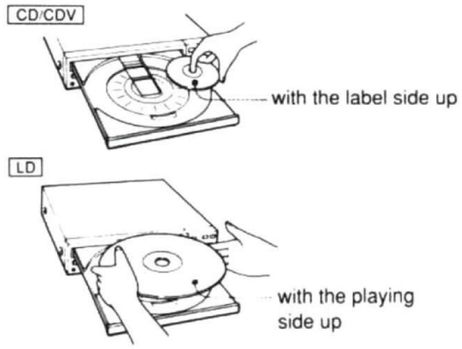

5 Press ≜ OPEN/CLOSE or ► (play) to start playback.
CDV: Playback starts from the video portion.

Notes on disc tray

- Insert only one disc at a time.
- Make sure that the disc is placed properly in the tray. Incorrect positioning may result in permanent damage to the disc.

Using an optional timer
To automatically start playback with an optional timer, leave the POWER switch of the disc player in the depressed position. When the timer supplies power at the preset time, the unit turns on and playback starts.

To pause at the beginning of a disc
Press **II** on the player or the Remote Commander. The tray closes, and the player pauses at the beginning of the disc.

AV calendar
When playing a CD, CDV, or an LD containing TOC (Table of Contents) data, the AV calendar shows information on the total number of tracks or chapters. As tracks or chapters are played, the corresponding numbers on the display go out.

To switch between the video portion and the audio portion
Use the V.PART/A.PART button to locate the desired track.

Advanced Playback

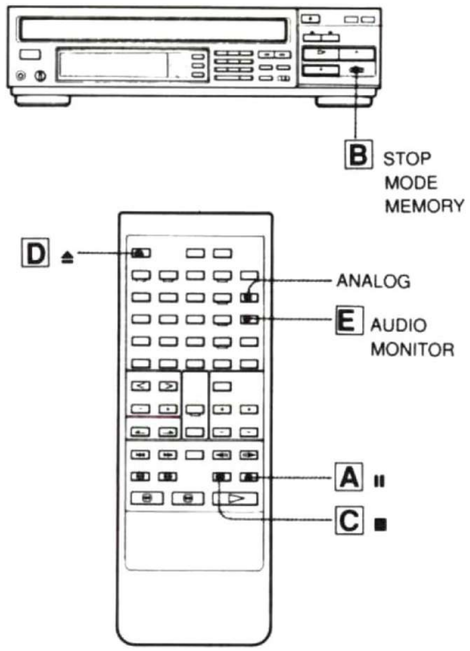

To temporarily interrupt playback [A]

Press II (pause).
When playing CAV discs, the sound is cut off and a still picture is shown.
When playing other discs, the unit enters the pause condition. To resume play from the same point, press ►.

To stop playback and resume at the same point later – for LD only [B]

Set the STOP MODE MEMORY switch to MEMORY.

Memory stop precaution

- Pressing any button other than ► or ■ (the ≜ OPEN/CLOSE button, in particular) deactivates the MEMORY STOP function.
- The MEMORY STOP function is only approximate. There may be a slight difference of a few frames between the stopping and starting positions when you use the MEMORY STOP function.
- The MEMORY STOP function does not operate during shuffle play, program play, single-chapter/track repeat, A↔B repeat, or single-chapter/track stop.
- When the power was turned off, the MEMORY STOP function does not operate and playback will start from the beginning of the disc.

To stop playback [C]

Press ■ (stop).
To restart playback from the beginning of the disc, press ►.

To stop playback and remove the disc [D]

Press ≜ OPEN/CLOSE.
Remove the disc and press ≜ OPEN/CLOSE to close the tray.

To play a stereo or a second audio program (SAP) LD [E]

		After playback has started	Press AUDIO MONITOR ➡	Press AUDIO MONITOR ➡
Reproduced sound	Stereo disc	Stereo	➡ Left channel	➡ Right channel
	SAP disc	Audio signal (1) (left channel) Audio signal (2) (right channel)	➡ Audio signal (1)	➡ Audio signal (2)
Indicators lit		1/L 2/R	➡ 1/L	➡ 2/R

Discs with CX Label
Discs bearing the CX label are recorded with the CX noise reduction system, which gives lower noise levels and higher dynamic range. The CX indicator should automatically light up. Some CX discs do not include the code necessary to automatically activate the player's CX noise reduction system. If the CX indicator does not light, press the CX button on the Remote Commander to manually activate the system.

To switch between digital and analog sound on an LD (for NTSC discs only)
If the LD contains a digital stereo sound signal, the player automatically sends that to the output jacks. Pressing the ANALOG button on the Remote Commander switches to the analog audio signal and turns the DIGITAL SOUND indicator off. Press the ANALOG button a second time to return to digital sound output. With certain discs, there may be a difference in volume between the digital and the analog sound.

www.hifiengine.com

To Change Playback Speed and Direction – Speed Play (CAV Standard-play)

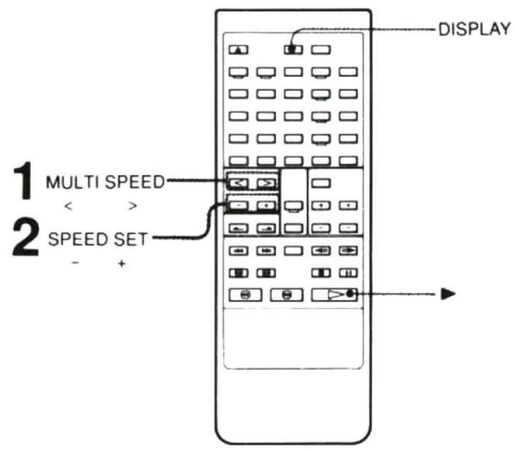

To change the speed

1 Select the playback direction.
Press > for the forward direction.
Press < for the reverse direction.

2 Select the playback speed.
Press + to increase speed.
Press – to reduce speed.

Fast ↕ Slow

Speed indication	Speed (approx.)
×10	10 times normal speed
× 5	5 times normal speed
× 3	3 times normal speed
× 2	2 times normal speed
× 1	Normal speed
×1/2	1/2 normal speed
×1/4	1/4 normal speed
×1/8	1/8 normal speed
×1/16	1/16 normal speed
×1/30	1/30 normal speed
×1/90	1/90 normal speed

Press ► to resume normal playback.

To change the direction

Press < to view the picture in reverse direction, or press > to view in forward direction.
To resume normal playback, press ►.

To display the speed and direction

Press DISPLAY.
The selected direction (< or >) and speed are shown.

Sound during speed play
The sound can be heard only during ×1 (normal) speed play in the forward direction. In other speed and direction combinations, the sound is muted

CLV discs
The above functions are available only with CAV discs. If they are attempted with CLV discs, a three-second warning message, SIDE A CLV or SIDE B CLV, will appear on the screen.

PAL discs
The image may be in black and white during ×10 (10 times) speed play in both directions.

Discs with automatic picture stop function
When a picture stop code is encountered during playback at the normal speed or slower than the normal speed, playback stops at that frame. Press ► to resume playback or a speed play button to continue the speed play.

To Play Frame by Frame – Freeze-Frame, Step Playback (CAV Standard -play)

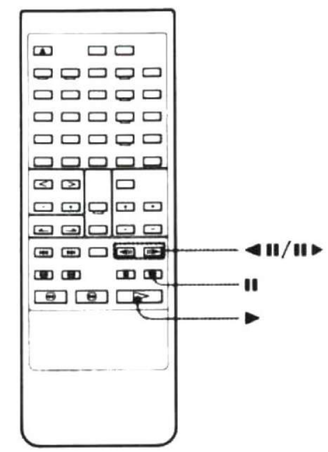

To view a still picture – freeze-frame

Press II (pause).
The picture stops at the current frame.
To resume normal playback, press ►.

To view one frame at a time – step playback

Press II (pause) once for freeze-frame.
To advance the picture by one frame, press II► (STEP in forward).
To go back by one frame, press ◄II (STEP in reverse).
Hold the button down for continuous frame by frame viewing.
To resume normal playback, press ►.

During freeze-frame or step playback operation
The sound is muted during still and step playback.

www.hifiengine.com

To Search for a Particular Scene

Scan Function

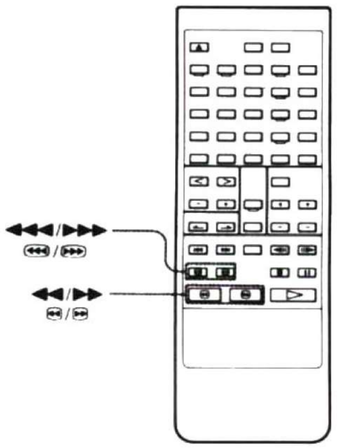

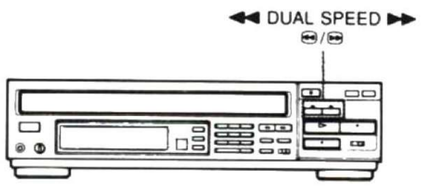

Normal scan

To scan in reverse, keep ◀◀ pressed.
To scan in forward, keep ▶▶ pressed.
To stop scanning, release the button.

High-speed scan

To scan in reverse at higher speed, keep ◀◀◀ pressed.
To scan in forward at higher speed, keep ▶▶▶ pressed.

Using the button on the main unit

Keep ◀◀ or ▶▶ pressed lightly for normal scan in reverse or forward.
Keep ◀◀ or ▶▶ pressed firmly for high-speed scan in reverse or forward.

While scanning in either direction

- The sound is muted.
- The image with a CLV disc will be in black and white with some instability.
- Scanning speed varies according to the position on the CLV disc.
- The image with a CAV discs will be in black and white on some TV.
- A certain amount of noise is inevitable with all scanning operations. Especially, the image of CAV discs may be a little noisy.

Chapter/Track Search

Some LDs are divided into sections called chapters. The selections on CDs and CDVs are called tracks. Chapters and tracks are assigned numbers and this information is usually indicated on the disc jacket or label.

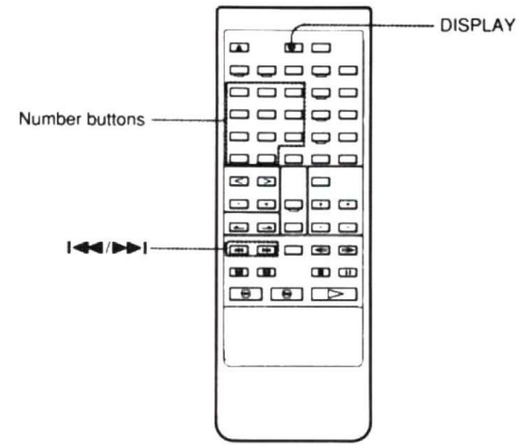

Direct chapter or track search

Enter the desired chapter or track number by pressing the number buttons.
If you have pressed a wrong number, simply press the correct one.
Playback automatically starts from the designated chapter or track.

Chapter or track skip search

To advance to the beginning of successive chapters/tracks, press ▶▶| repeatedly as needed.
To return to the beginning of the current chapter/track, press |◀◀ once. Press it repeatedly - before the picture reappears - to go to the beginning of previous chapters/tracks.

To check the current chapter/track and frame/time numbers
The numbers are shown in the display window of the player. Press DISPLAY to display them on the screen.

To enter a number greater than 10
Use the +10 and "0" buttons.
Example To enter 14 [+10] → [4]
To enter 20 [+10] → [+10] → [0]

If the +10 button was pressed by mistake
Press the +10 button repeatedly to revert to 0- or 1-.

Notes

- The chapter search feature will not function if the disc does not include chapter numbers. In this case, the screen message will give only frame or time numbers.
- If a chapter number not contained on an LD is entered, playback stops. If the ALL repeat function is on (see page 22), playback will resume from the beginning of the disc.
- During CDV playback, the unit will not accept entry of track numbers not contained on the disc.

www.hifiengine.com

To Search for a Particular Scene

Frame Search (CAV Discs)

Each picture on a CAV (standard-play) disc is called a frame.

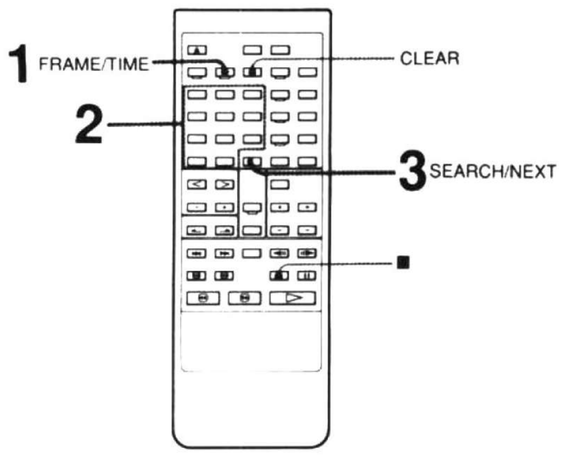

Example: Locate frame number 12340.

1 Press FRAME/TIME.

2 Press "1", "2", "3", "4", and "0" in sequence to enter the frame number.
If you enter a wrong frame number, press FRAME/TIME once more to return the display indication to zero, and then enter the correct number.

3 Press SEARCH/NEXT.
The desired frame is located, and playback automatically starts.

Search can be made in the freeze-frame, pause, and speed play modes as well as the normal playback mode. When the desired frame appears after the search, playback continues in the same mode.

To cancel frame search
Before the SEARCH/NEXT button is pressed: Press CLEAR.
After the SEARCH/NEXT button was pressed: Press ■.

To check the current chapter and frame numbers
These numbers appear in the display window on the player. Press DISPLAY on the Remote Commander to display them on the screen.

Note

If a frame number not contained on a disc is entered, playback stops. If the ALL repeat function is on (see page 22), playback will resume from the beginning of the disc.

Time Search (CLV Discs)

CLV (extended-play) discs keep track of the position as elapsed time from the beginning of the disc.

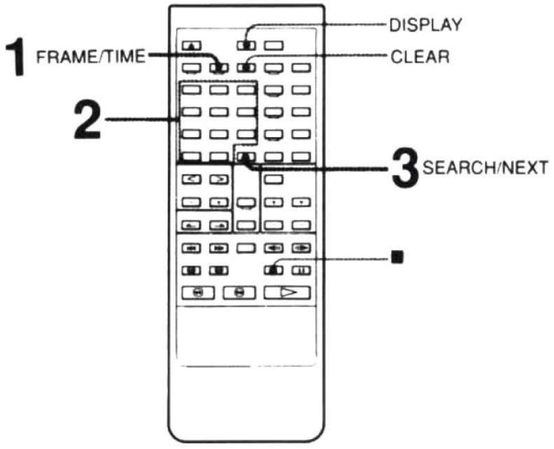

Example: Locate the 12 min 05 sec point.

1 Press FRAME/TIME.

2 Press "1", "2", "0", "5" in sequence.
If you enter a wrong time number, press FRAME/TIME once more to return the display indication to zero, and then enter the correct number.

3 Press SEARCH/NEXT.
The picture of the desired time number is located, and playback automatically starts.

To cancel time search
Before the SEARCH/NEXT button is pressed: Press CLEAR.
After the SEARCH/NEXT button was pressed: Press ■.

To check the current chapter and time numbers
These numbers appear in the display window on the player.
Press DISPLAY on the Remote Commander to display them on the screen.

Notes

- If the disc does not include time data to the second, enter the time in minutes only.
- If the number selected is greater than the total time of the disc, playback stops. If the ALL repeat function is on (see page 22), playback will resume from the beginning of the disc.

www.hifiengine.com

To Play Particular Portions of a Disc

Repeat Playback

A single chapter or track, a designated portion of a disc, or the entire disc can repeatedly be played back.

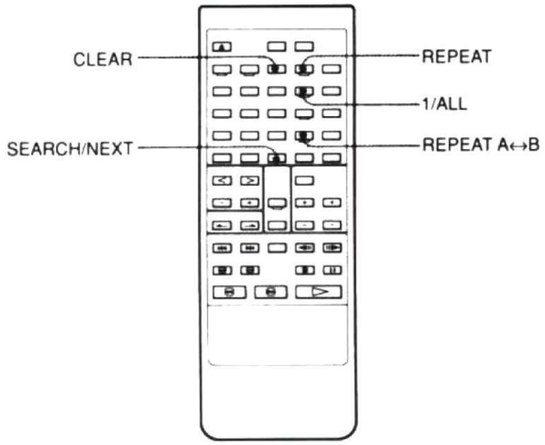

To repeat the current chapter or track – SINGLE repeat

1 Press REPEAT.

2 Press 1/ALL.
The REPEAT and SINGLE indicators light up in the display window.
When the end of the current chapter or track is reached, playback of the chapter or track is automatically repeated.

To repeat the entire side of the disc – ALL repeat

Press REPEAT.
The REPEAT indicator lights up in the display window, and the entire side of the disc is repeatedly played back.

To repeat a designated portion of a disc – A↔B repeat

1 During playback, press REPEAT A↔B at the start point (point A) of the desired portion.
The REPEAT A↔B indicator flashes in the display window.

2 At the end point (point B) of the desired portion, press REPEAT A↔B.
REPEAT A↔B lights up in the display window.
The player returns to the point where REPEAT A↔B was first pressed, and repeat playback automatically starts.

To use custom repeat
To carry out repeat playback between two predefined points on the the disc, see page 31.

To check the current status
Check the indicators in the display window or use the DISPLAY button to verify the current setting on the screen.

To cancel A↔B repeat
Press CLEAR.

To cancel repeat functions other than A↔B repeat
Press REPEAT again to cause the REPEAT indicator in the display window to go out. (The same button that was used to activate repeat – on the player unit or on the Remote Commander – must be pressed to cancel it.)

Program Playback

Up to 20 chapters or tracks can be played back in a specified order.

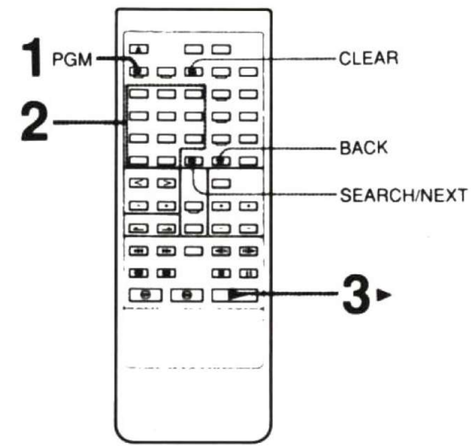

Example: To play LD chapters 5, 4, 2, and 6 in that order.

1 Press PGM.
The PROGRAM indicator in the display window lights up.

2 Enter the chapter numbers by pressing "5", "4", "2", and "6" in sequence.

3 Press ▶ (play).
The first chapter is searched for, and playback starts from the beginning of chapter 5 and continues through chapter 4, 2, 6, and stops.

If you make a mistake in chapter number entry
To start over, press CLEAR, and PGM again, and enter the correct numbers.
To change a number, press NEXT (for the next number) or BACK (for the previous number) until the incorrect number flashes on the screen, and then enter a new number.

To release or cancel program playback
Press CLEAR or 1/ALL. The player reverts to normal playback.

To repeat program playback
Use REPEAT to call up the REPEAT indicator.

To enter chapter numbers over 10
Use the +10 and "0" buttons.

If the +10 button was pressed by mistake
Press the +10 button repeatedly to revert to 0- or 1-.

To move to a preceding or following programmed track
Press the ⏮ or ⏭ button.

To check the program contents
Press PGM.
The program is displayed for about 3 seconds on the screen. The currently playing program number blinks.

Notes

- When the ⏭ or ⏭ button is kept pressed during program playback and the end of the current chapter or track is reached, the next programmed chapter or track is played back. When the ⏮ or ⏮ button is kept pressed, the beginning of the current chapter or track is located, but the unit does not go back to previous tracks or chapters.
- When a program contains chapter or track numbers which are not on a disc, the program may not be carried out.
- Program contents are stored until the disc is removed or the power is turned off.

www.hifiengine.com

To Search for a Particular Track

The selections on CDs and CDVs are called tracks. Each track is assigned a track number which is indicated on the disc jacket or label.

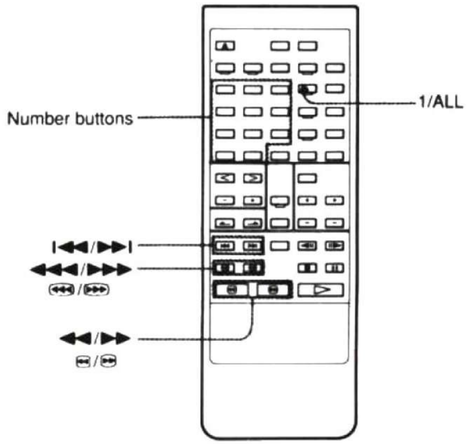

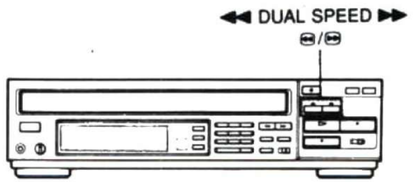

To search by a track number

Enter the desired track number by pressing the number buttons.

To play a single track once
Use the 1/ALL button on the Remote Commander to call up the SINGLE indicator. Then select the track with the numerical buttons.
When the track has been played, the unit enters the stop mode. To release the setting, press 1/ALL again.

When a wrong number was entered
Press the button for the correct number.

To skip tracks

To advance to the beginning of successive tracks, press ▶▶I repeatedly as needed.
To return to the beginning of the current track, press I◀◀ once. Press repeatedly to go back to the beginning of previous tracks.

To search for a particular point

Keep ▶▶ (scan forward) or ◀◀ (scan backward) pressed during playback, and release it to resume normal playback.

To scan at higher speed
keep ▶▶▶ (forward) or ◀◀◀ (backward) pressed during playback, and release it to resume normal playback.

On the player
Keep ▶▶ (forward) or ◀◀ (backward) pressed lightly for normal scanning.
Keep them pressed firmly for high-speed scanning.

To enter track numbers over 10
Use the +10 and "0" buttons.

If the +10 button was pressed by mistake
Press the +10 button repeatedly to revert to 0- or 1-.

Sound during search
When scan is started from the playback mode, the sound can be heard at a low level. When scan was started from the pause mode, the sound is muted.

To Change Time Display

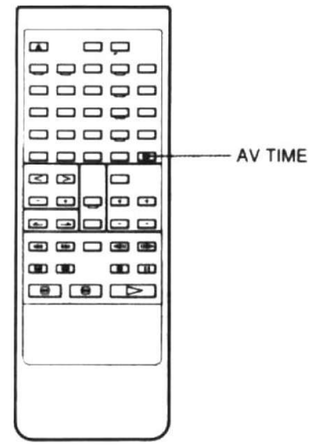

To change the time display in the display window, press AV TIME.
The display changes in the following sequence each time the button is pressed.

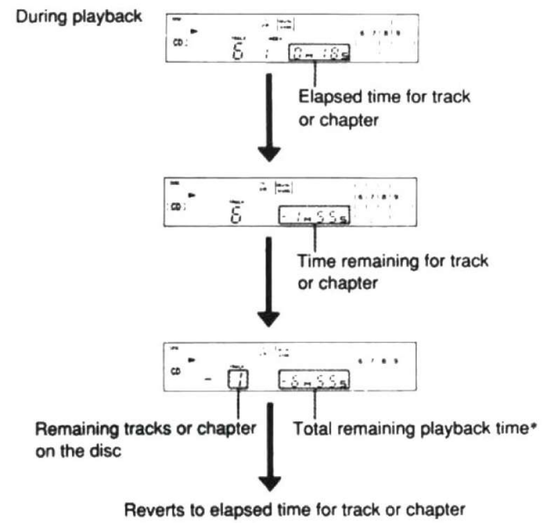

* With a CDV disc, these figures refer only to the portion (audio/video) currently in use.

Display on the screen
If the TV set or monitor connected to the player is on and the DISPLAY button is pressed, the track number, time, and other information recorded on the CD/CDV appears on the screen.

Note

The remaining time will not be displayed for a track number higher than 20.

Note on LD discs

The time display function is available only with an LD containing TOC data.
First, the elapsed time or the number of frames is displayed. Pressing the AV TIME button then changes the time display as shown above.

www.hifiengine.com

Auto Pause

After a chapter or track is played, the player enters the pause mode.

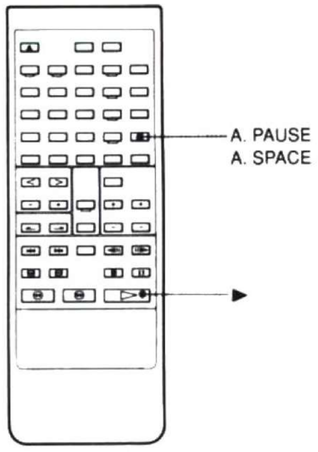

Press A. PAUSE/A. SPACE.

To start playback of next chapter or track
Press ▶ (play).

Auto Space

A blank interval of 3 seconds is inserted between playback of each chapter or track.

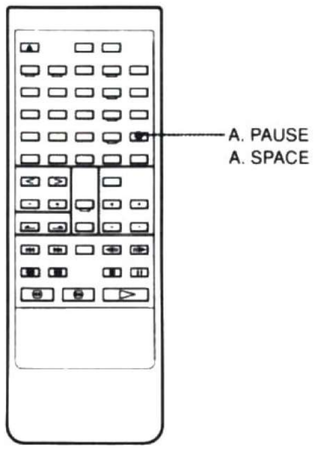

Press A. PAUSE/A. SPACE.

To return to normal playback
Each press of the A. PAUSE/A. SPACE button cycles the unit through the following conditions.

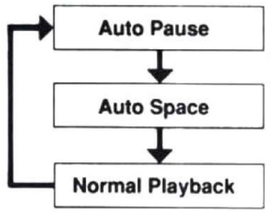

Custom Index

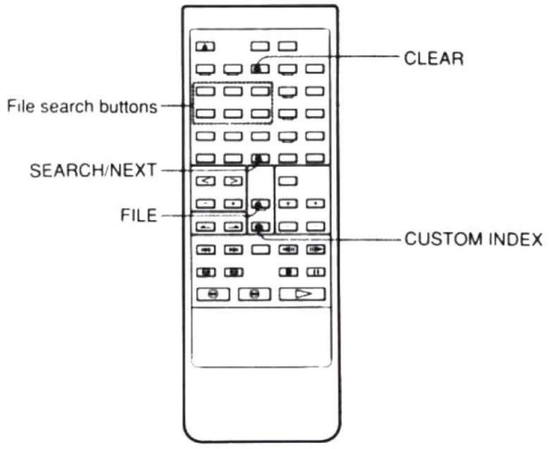

Custom Index

The Custom Index function lets you set six index marks max. at any point on the disc. Playback can then be started from an index point at the push of a button, and repeat playback between index points is also possible. This chapter explains how to set custom index marks on an LD, but the function can also be used for CDs or CDVs.

To set a custom index mark

Press FILE during playback.

Up to six locations anywhere on the disc can be marked.

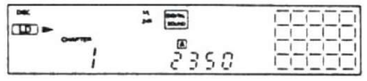

Indicators A, B, C, etc. light up for each custom index mark.

Custom Index Search

1 Press CUSTOM INDEX.
The AV calendar goes out and the number buttons 1–6 act as file search buttons A–F.

2 Press the file search button for the desired location.
Playback starts from the specified index point and continues until the end of the disc.

To jump to another index point
Press the corresponding file search button.

To return to normal playback
Press CUSTOM INDEX or CLEAR.

If you make a mistake
Press SEARCH/NEXT to cause the file indicator to flash.

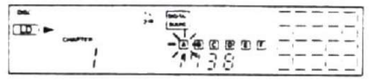

Press CLEAR and then FILE at the correct location.

www.hifiengine.com

SECTION 2
DISASSEMBLY

Note: The number within "●" means the sequential number for dismounting.

2-1. REMOVAL OF THE CABINET

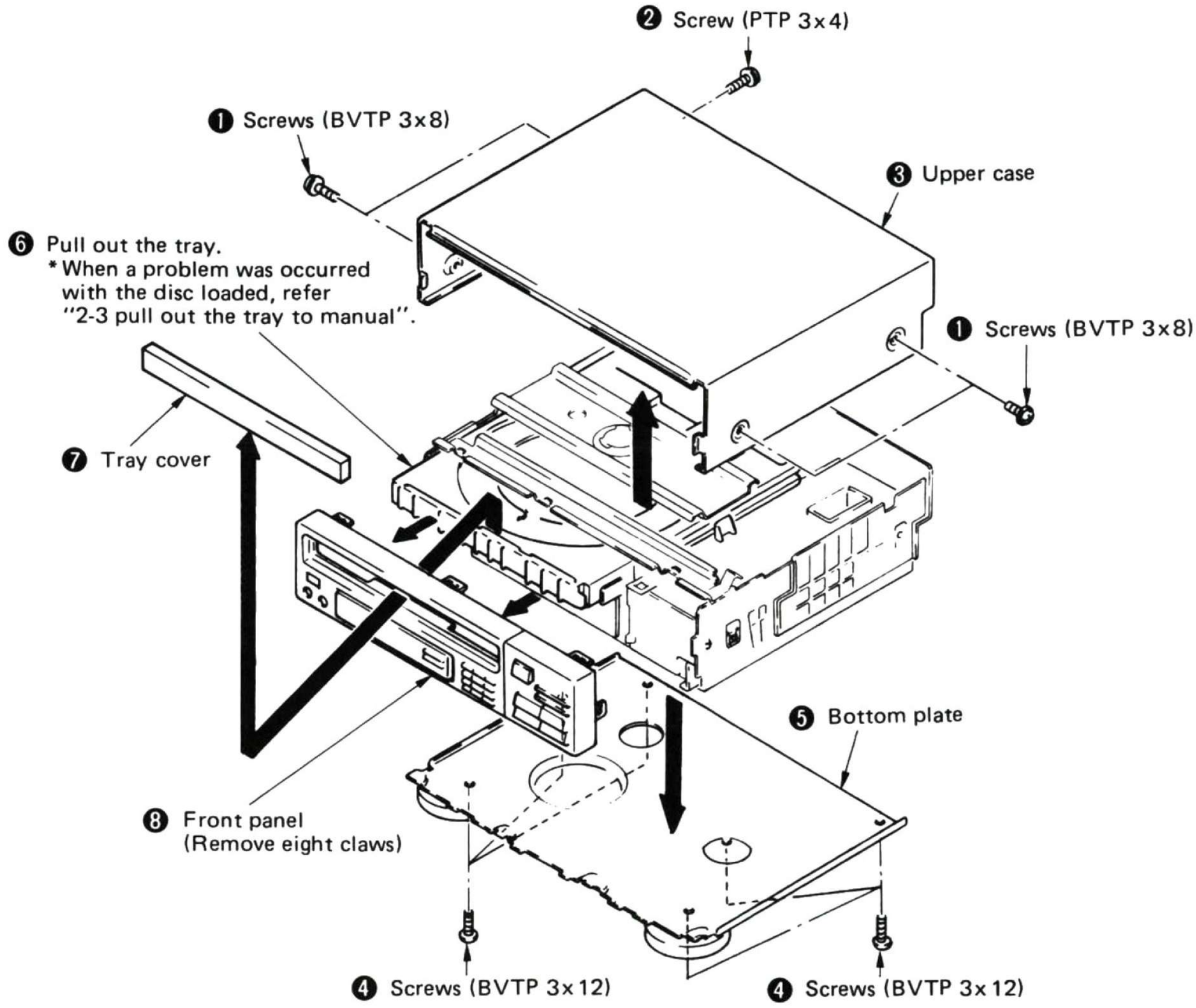

2-2. PULL OUT THE TRAY TO MANUAL

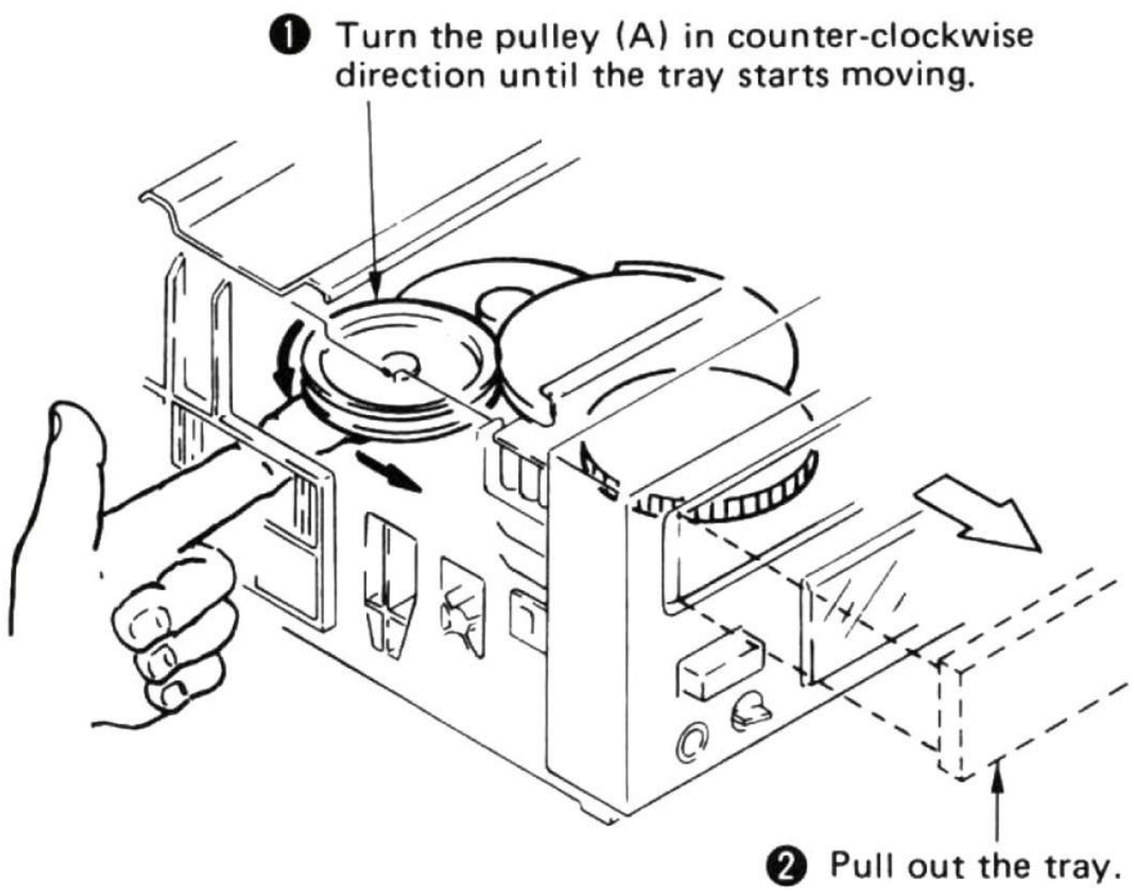

2-3. REMOVAL OF TRAY

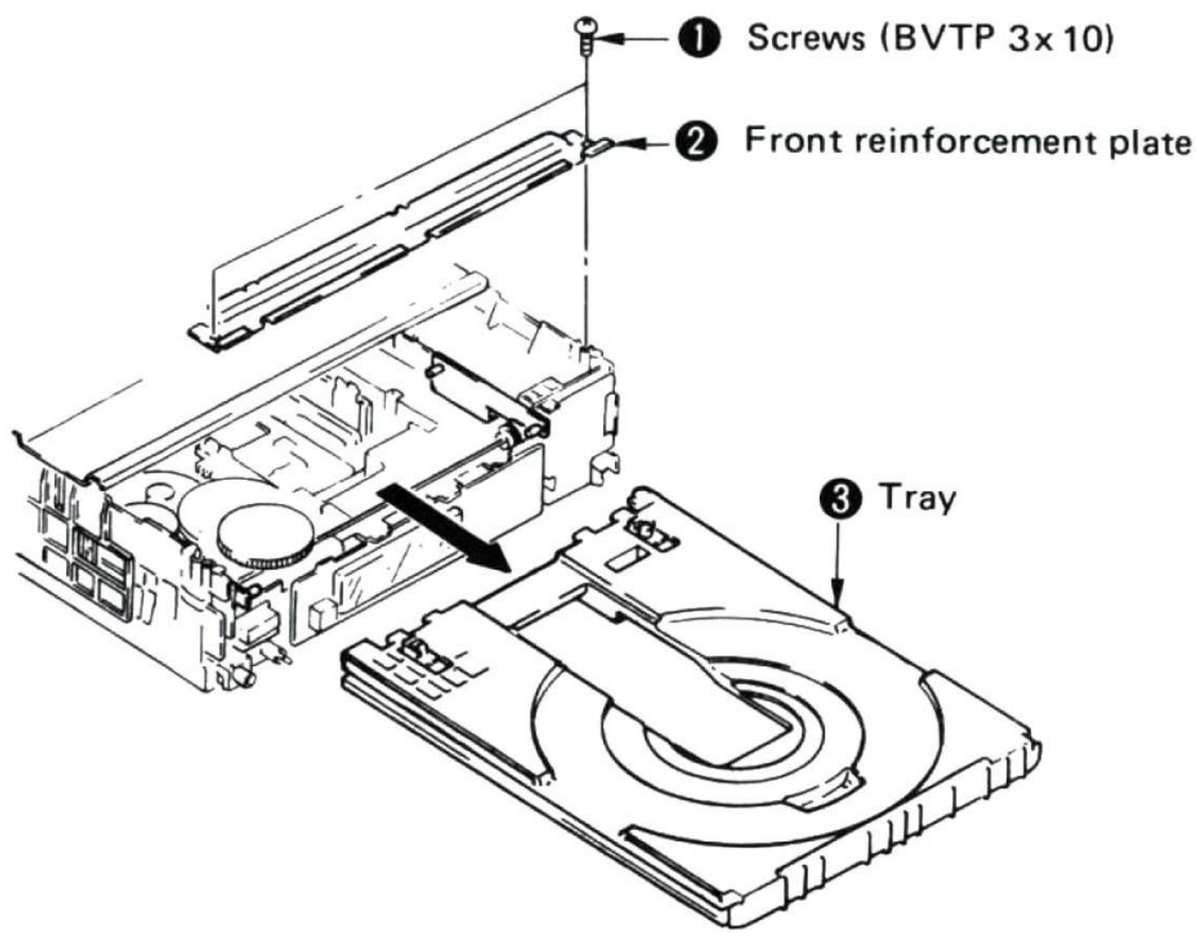

www.hifiengine.com

2-4. ALIGNMENT OF LOADING GEAR PHASE

1. Install the drive cam as shown in the illustration. At this time, make sure that the last tooth of gear is aligned with the line from the center of the tray gear axle and the drive gear axle.
2. Install the tray gear as shown in the illustration. At this time, make sure the flat surface of the cam is at a right angle with the drive cam.

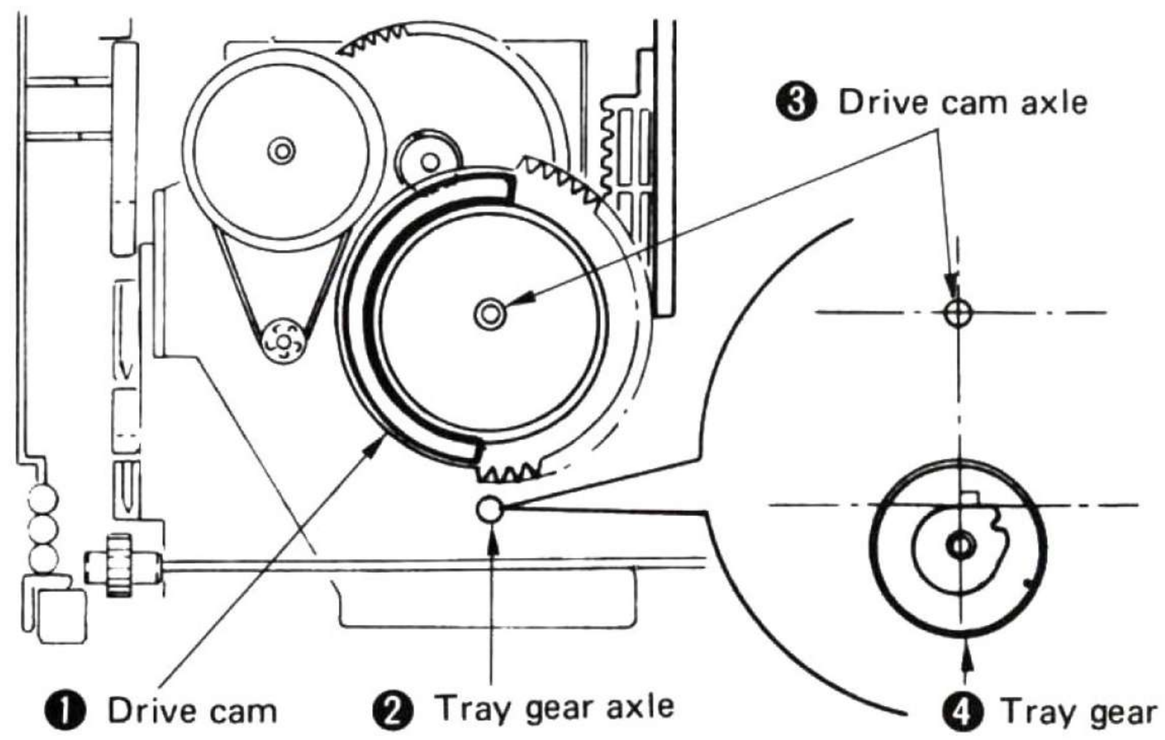

2-5. OPENING OF MP-15 BOARD

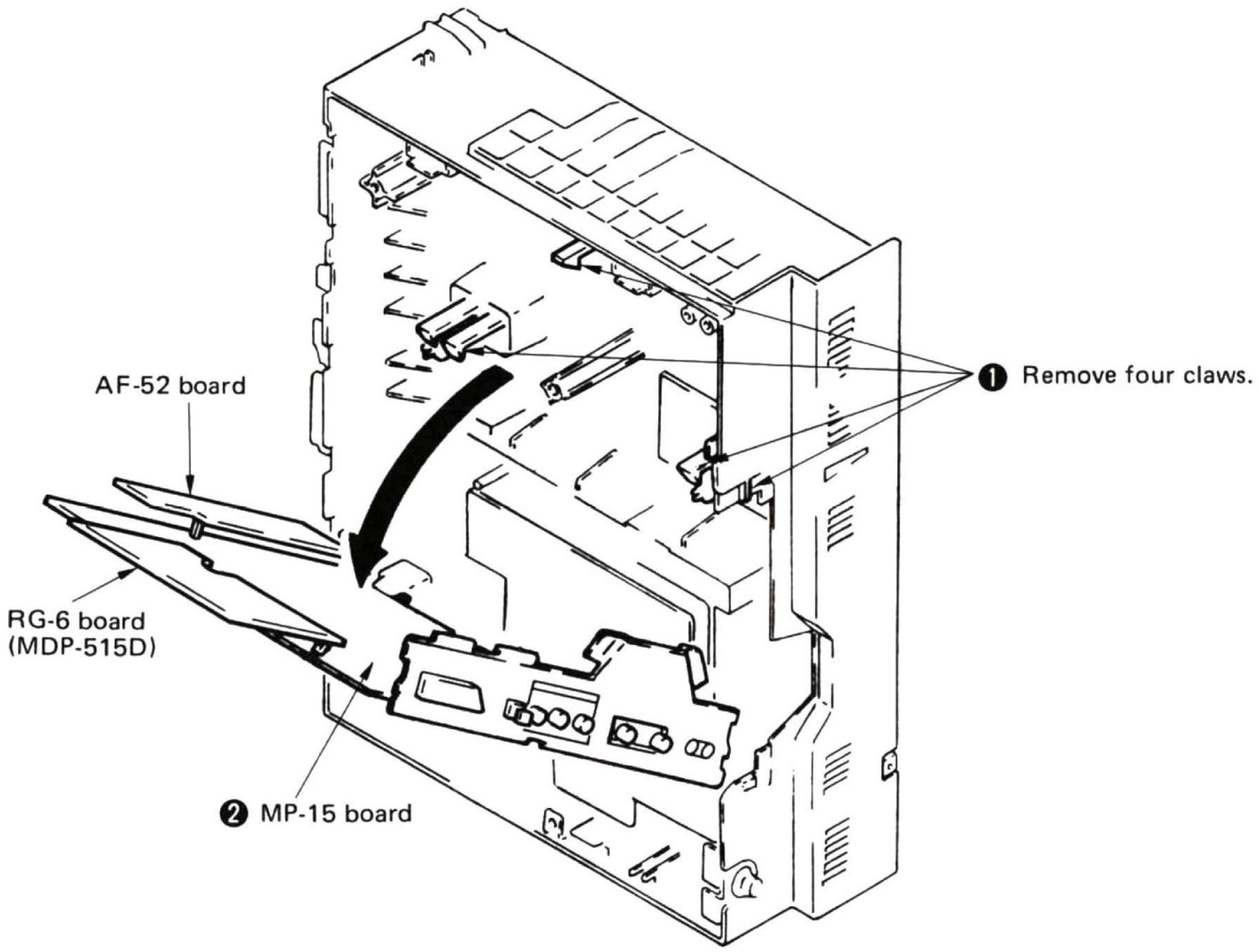

2-6. REMOVAL OF OPTICAL DEVICE

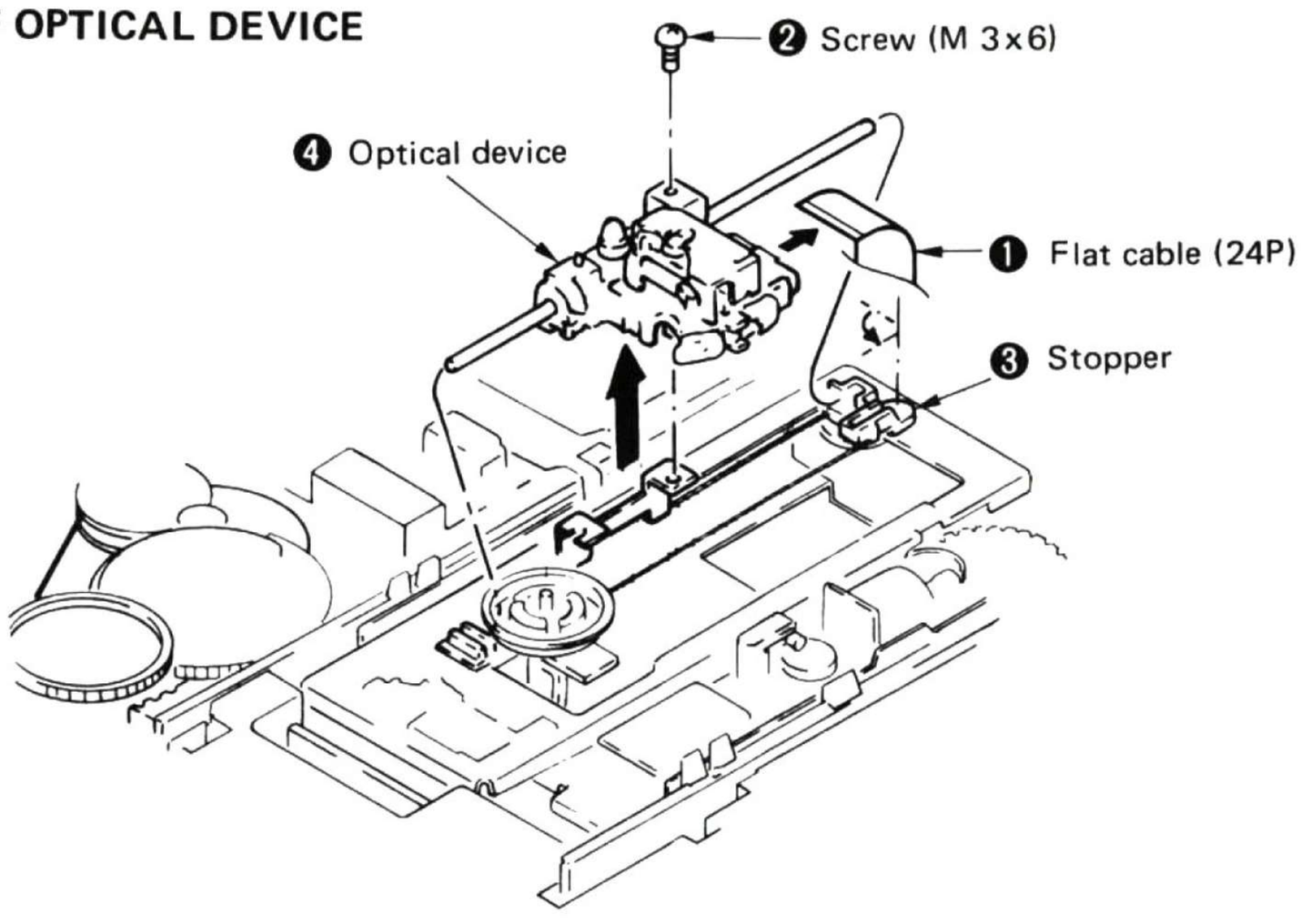

www.hifiengine.com

2-7. REMOVAL OF MD CHASSIS AND OPT. CHASSIS

- While pressing claw ❶ in the direction of arrow A , shift rack ❷ in the direction of arrow.

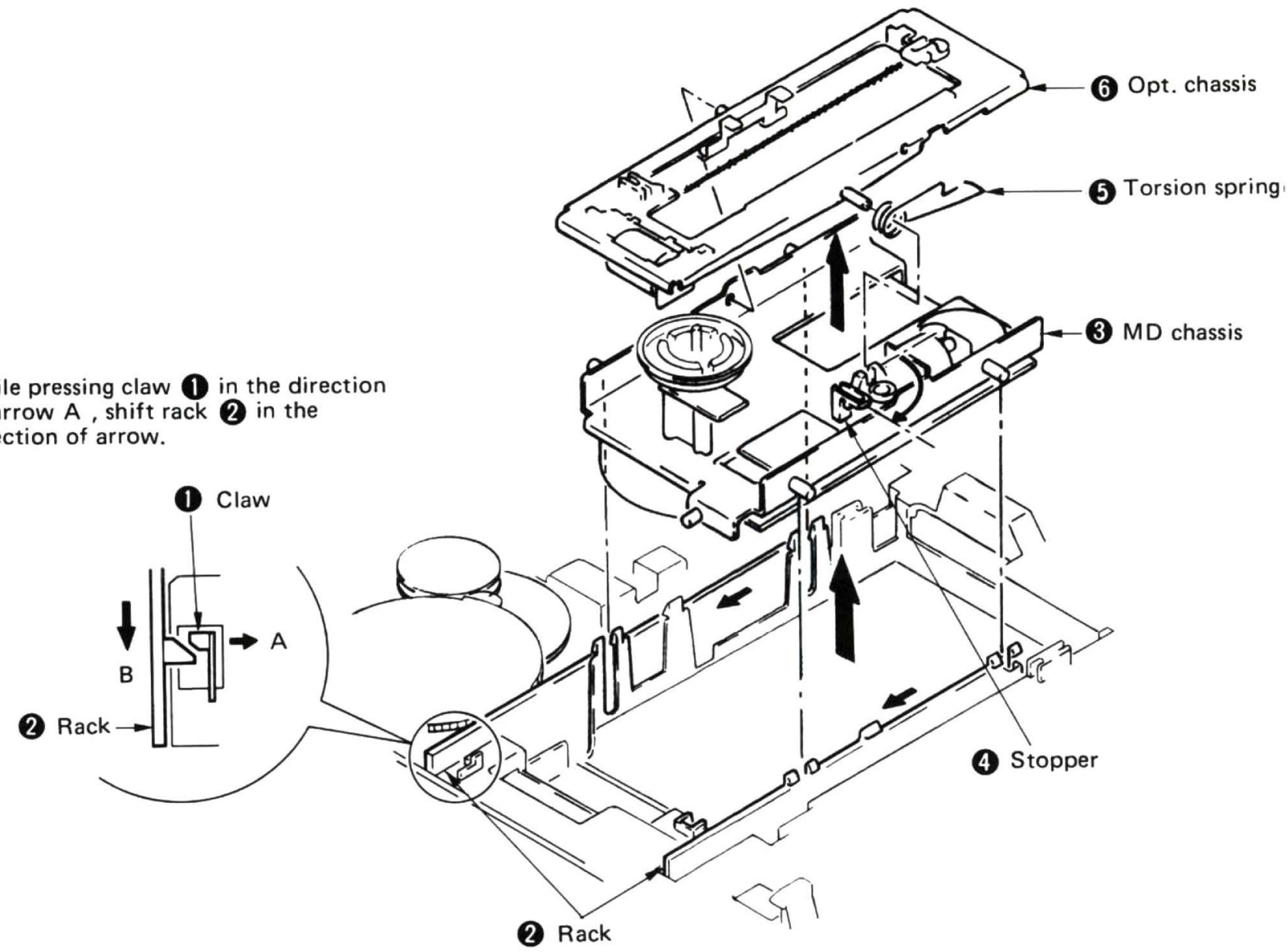

2-8. REMOVAL OF TURNTABLE, SPINDLE MOTOR, SV-33 BOARD AND FG-13 BOARD

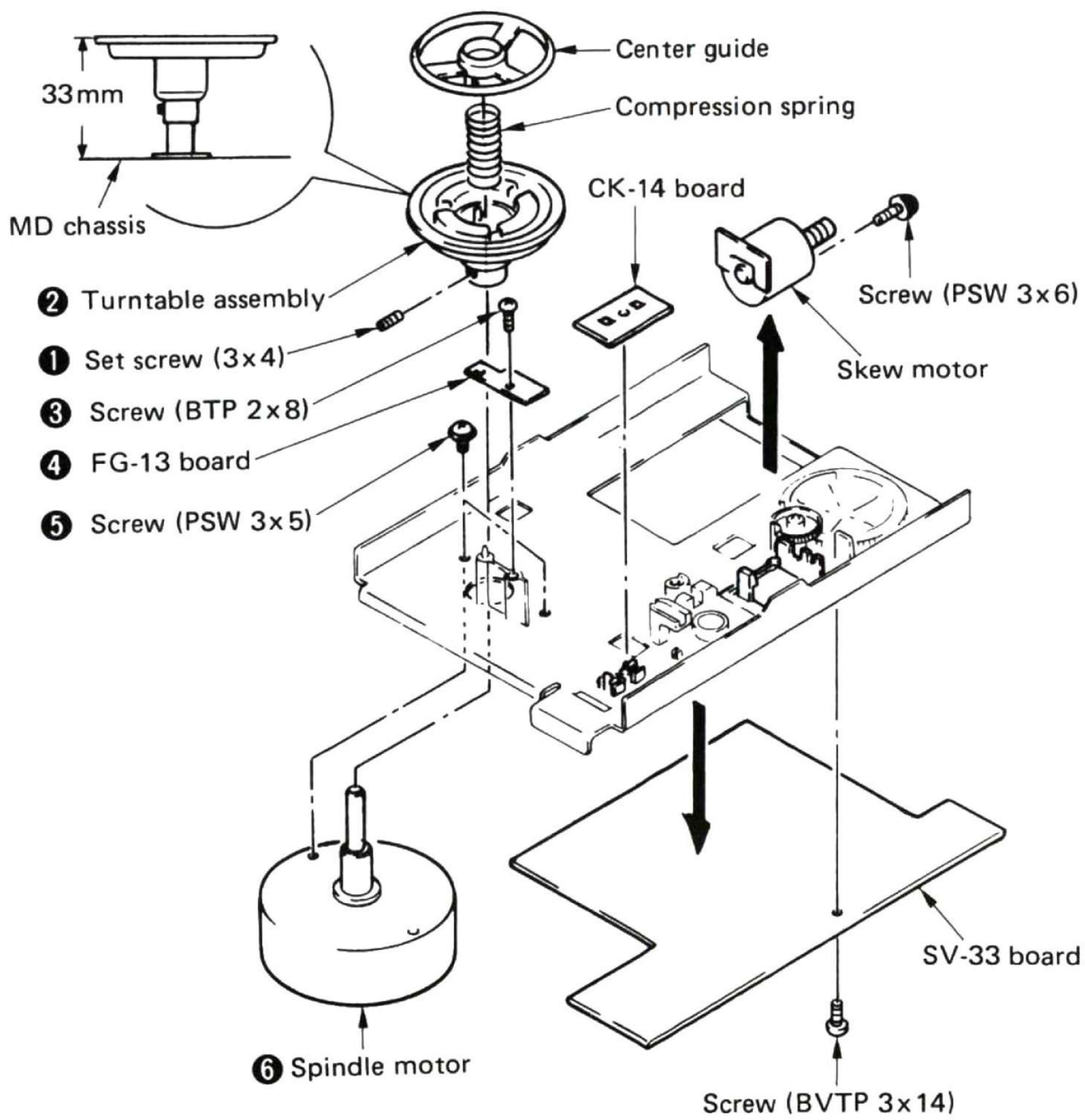

www.hifiengine.com

SECTION 3
DIAGRAMS

3-1. CIRCUIT BOARDS LOCATION

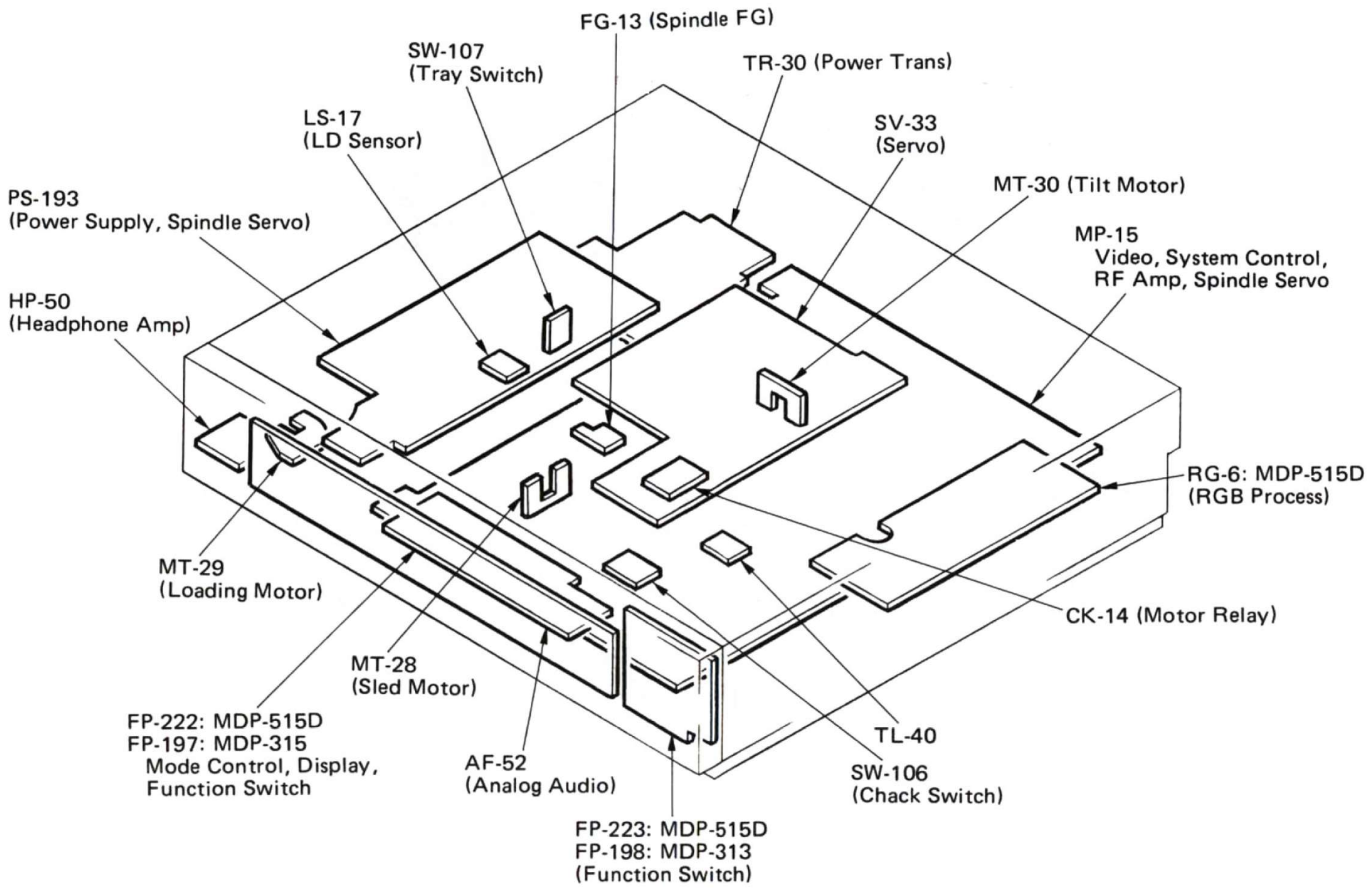

www.hifiengine.com

3-2. OVERALL BLOCK DIAGRAM

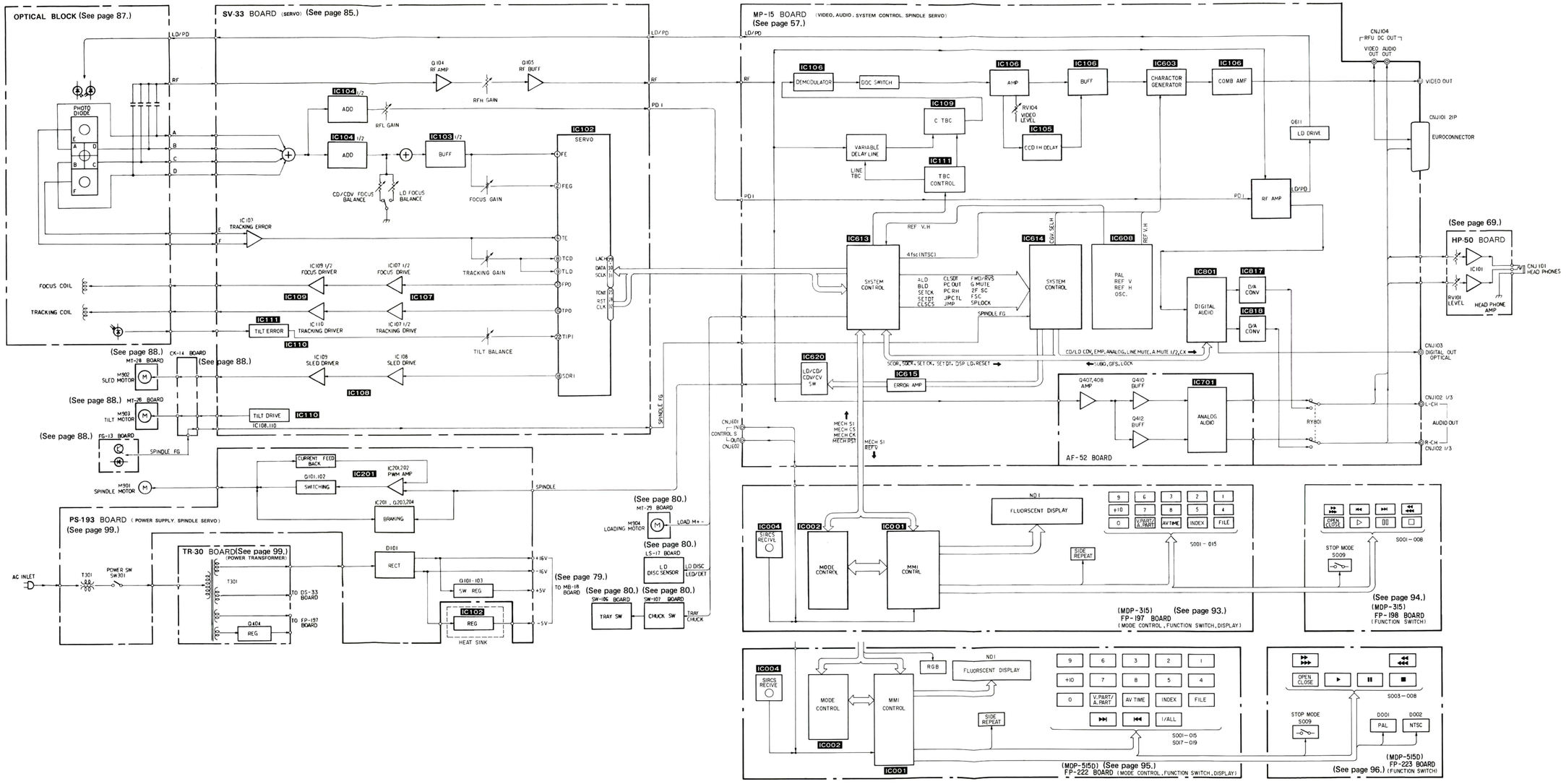

3-3. VIDEO BLOCK DIAGRAM

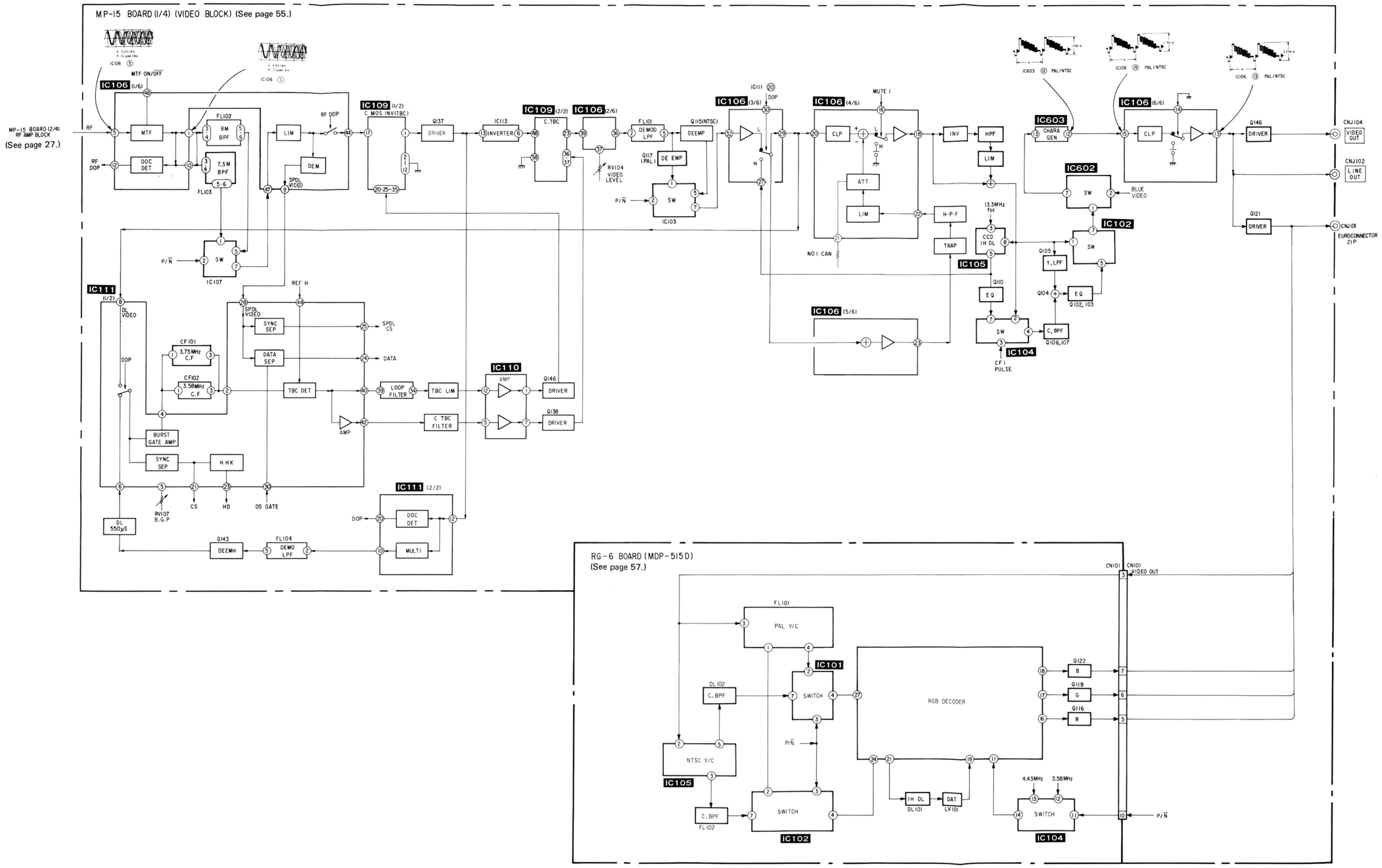

3-4. RF AMP BLOCK DIAGRAM

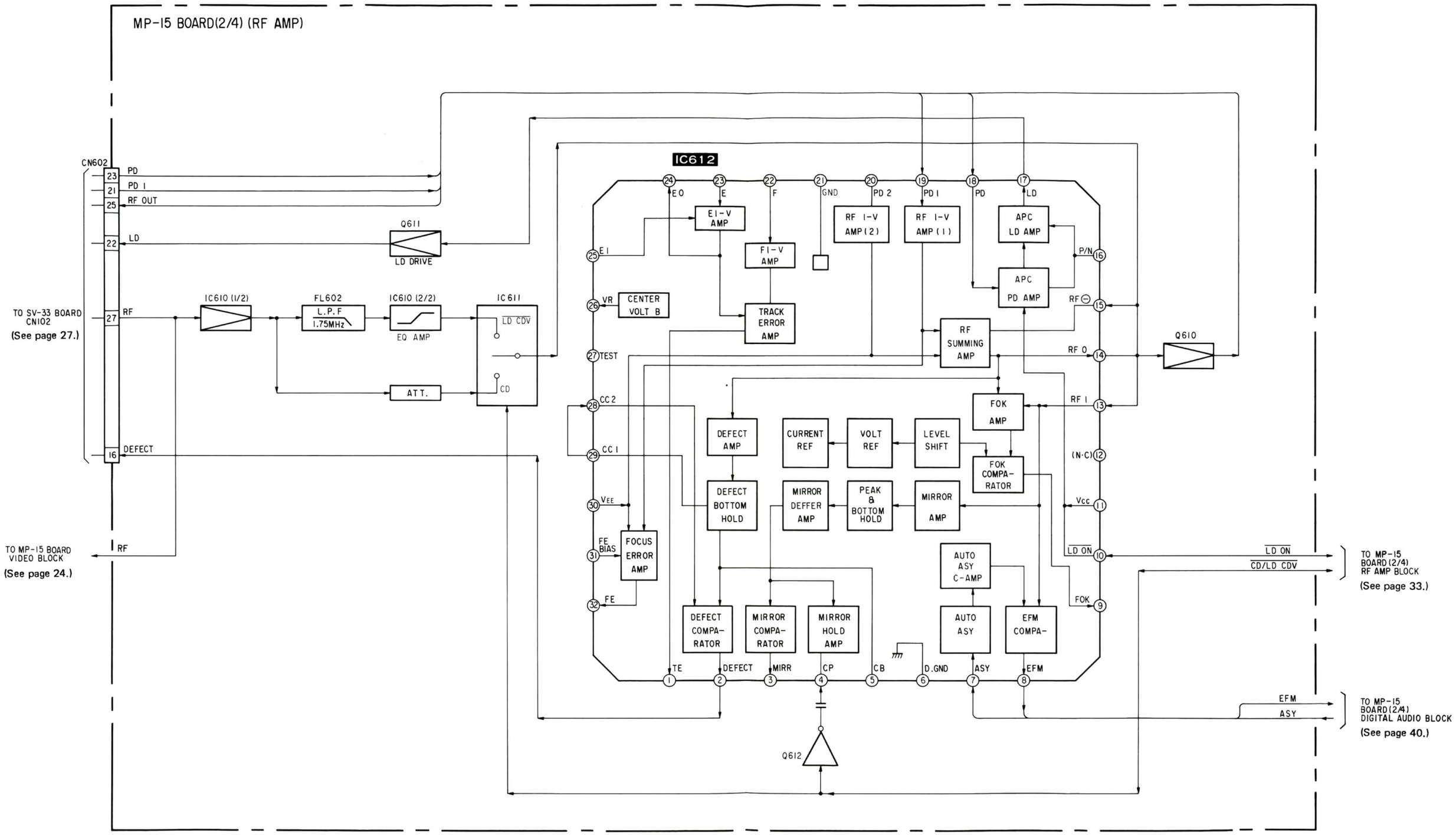

3-5. ANALOG AUDIO BLOCK DIAGRAM

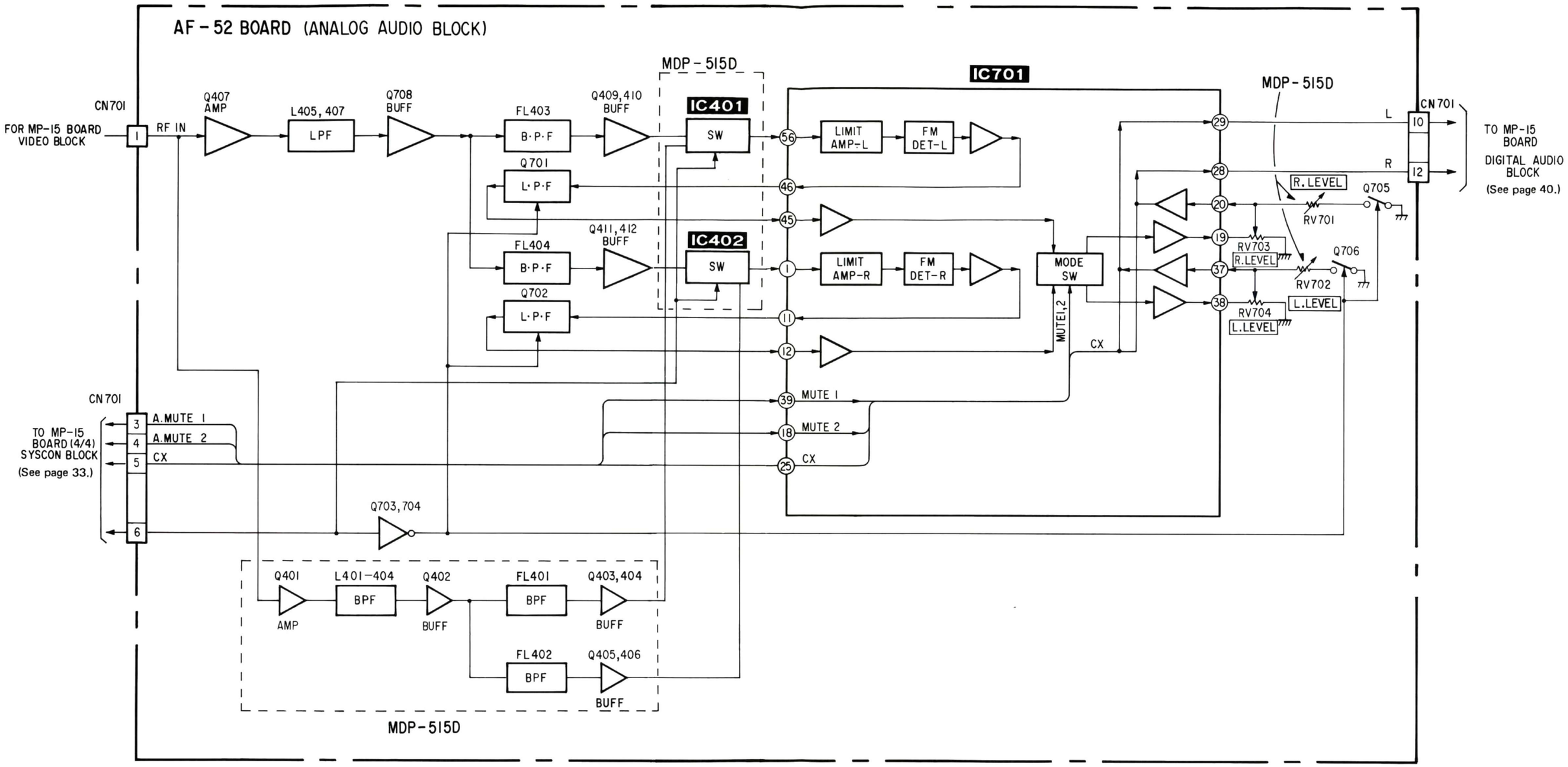

3-6. SYSTEM CONTROL BLOCK DIAGRAM

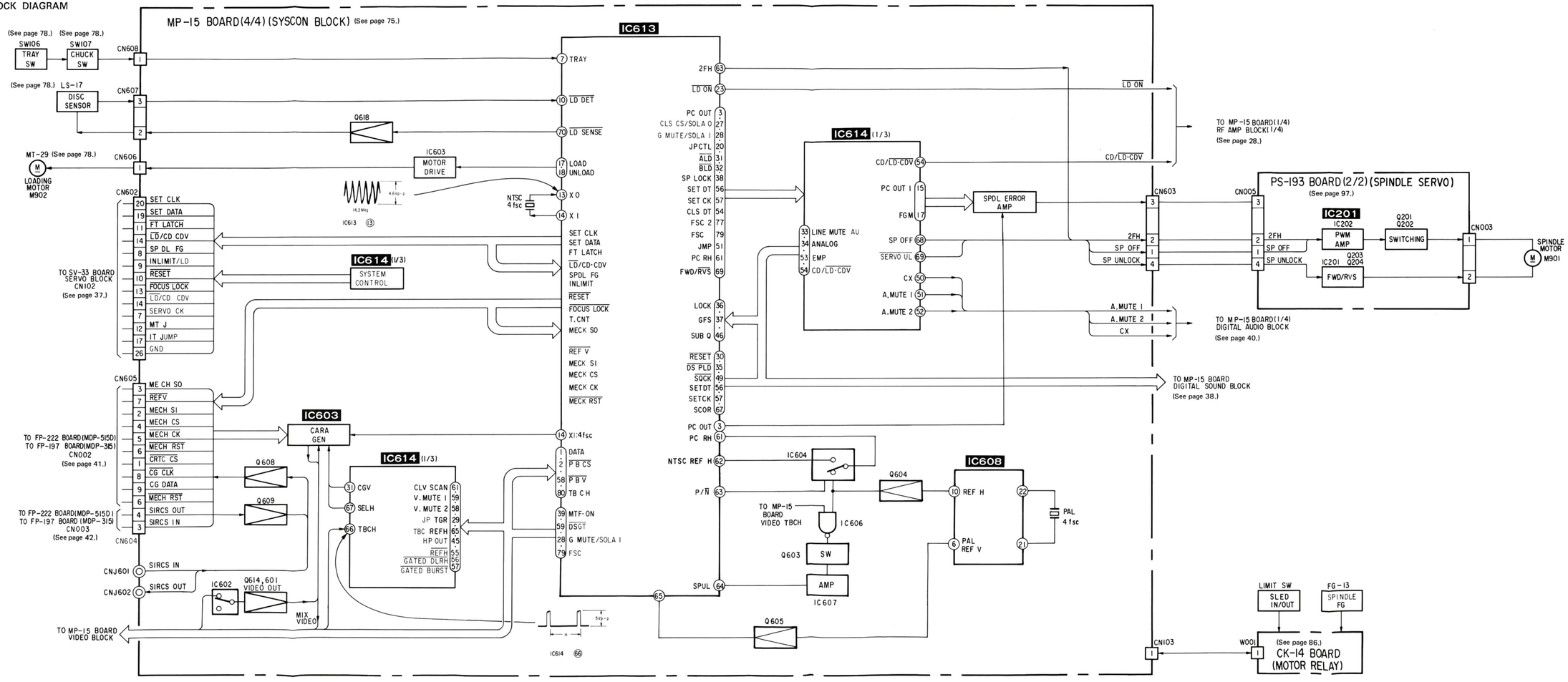

3-8. DIGITAL AUDIO BLOCK DIAGRAM

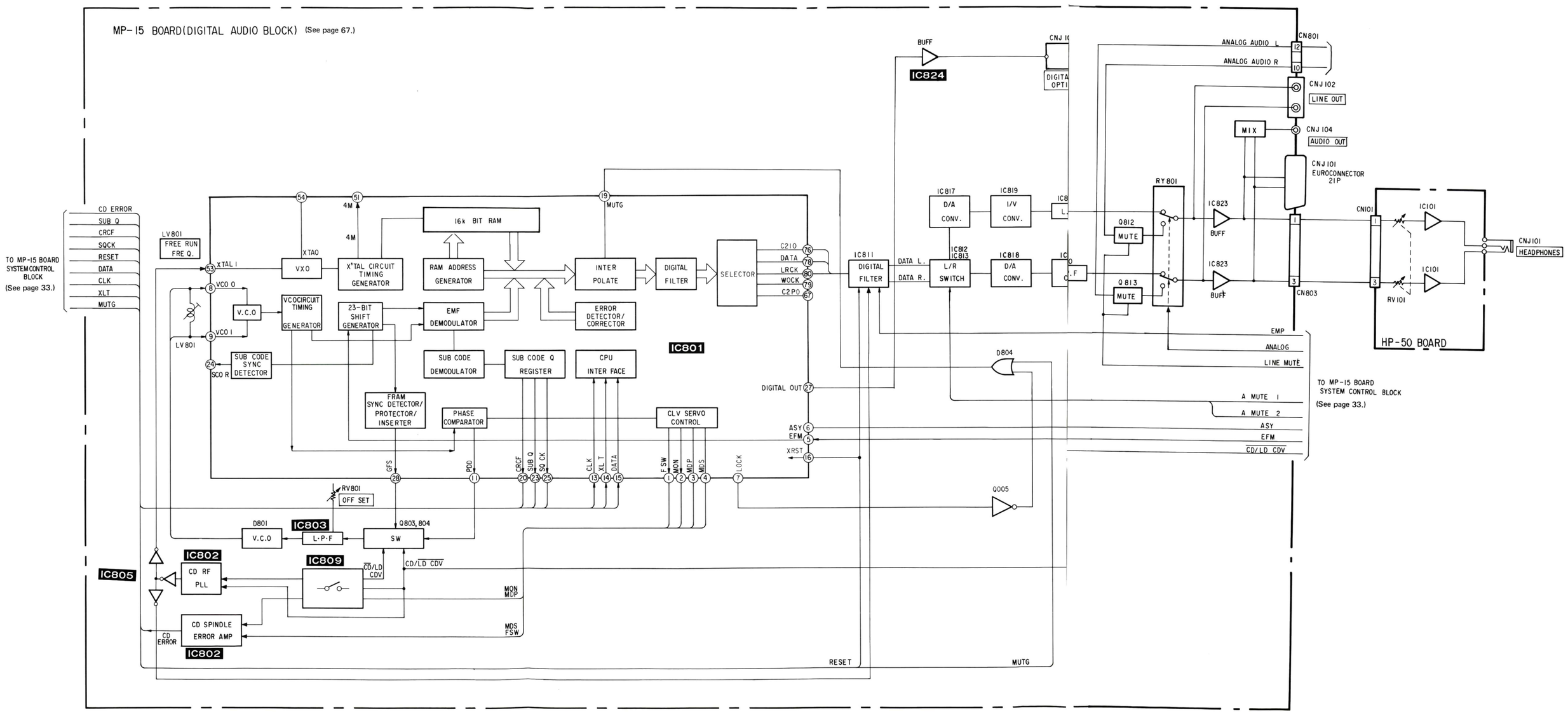

3-7. SERVO BLOCK DIAGRAM

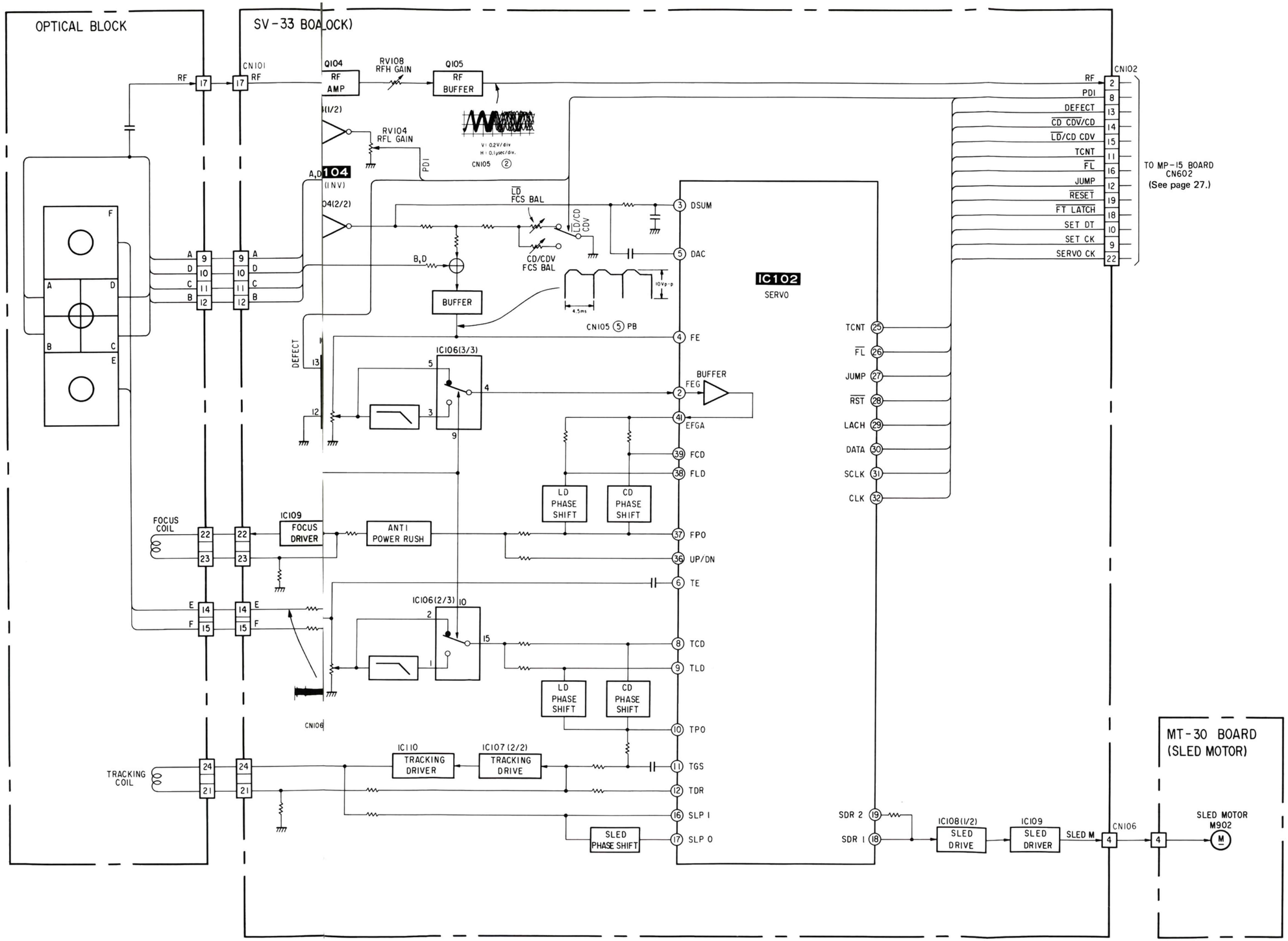

3-9. MODE CONTROL/FUNCTION SWITCH BLOCK DIAGRAM

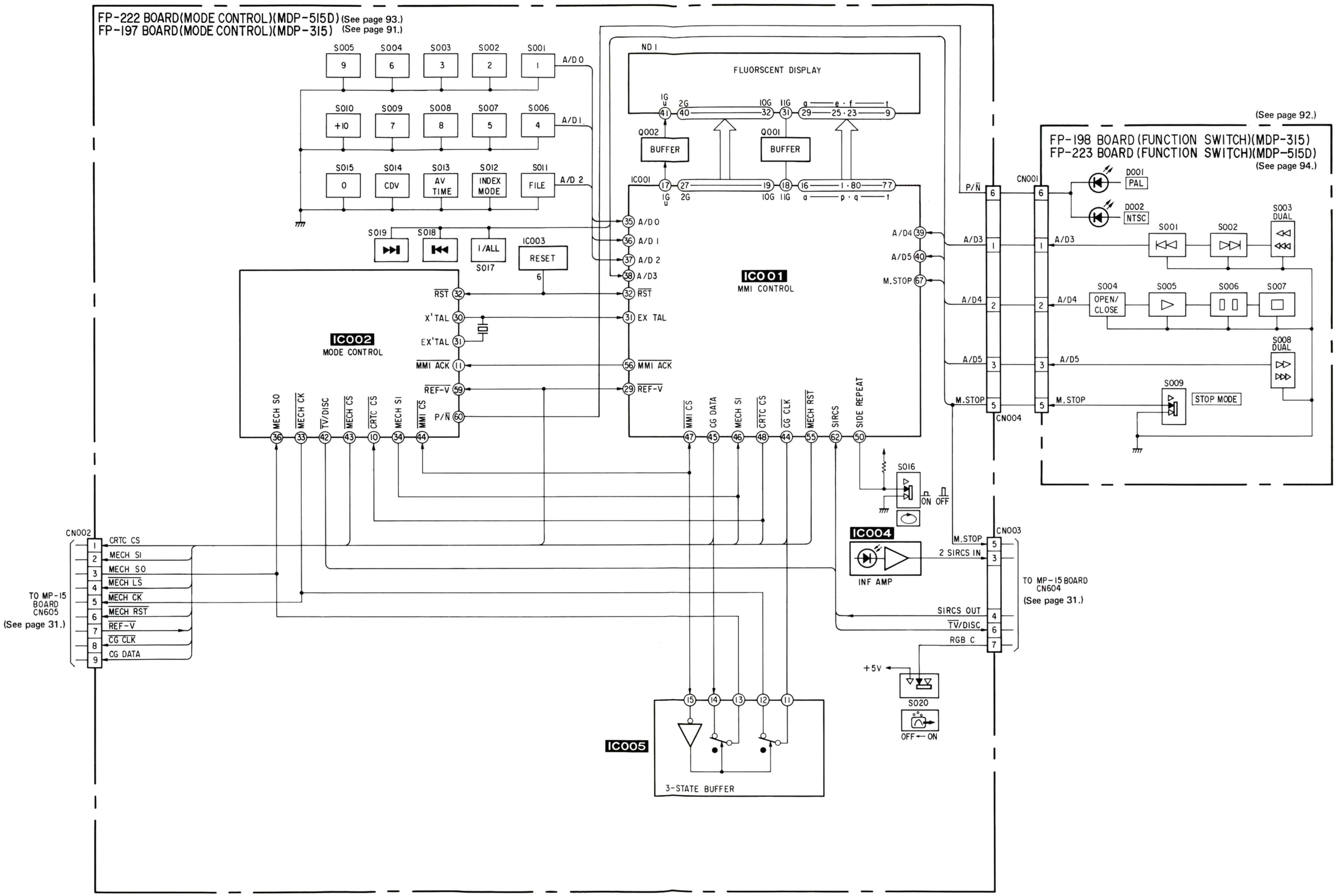

3-10. POWER BLOCK DIAGRAM

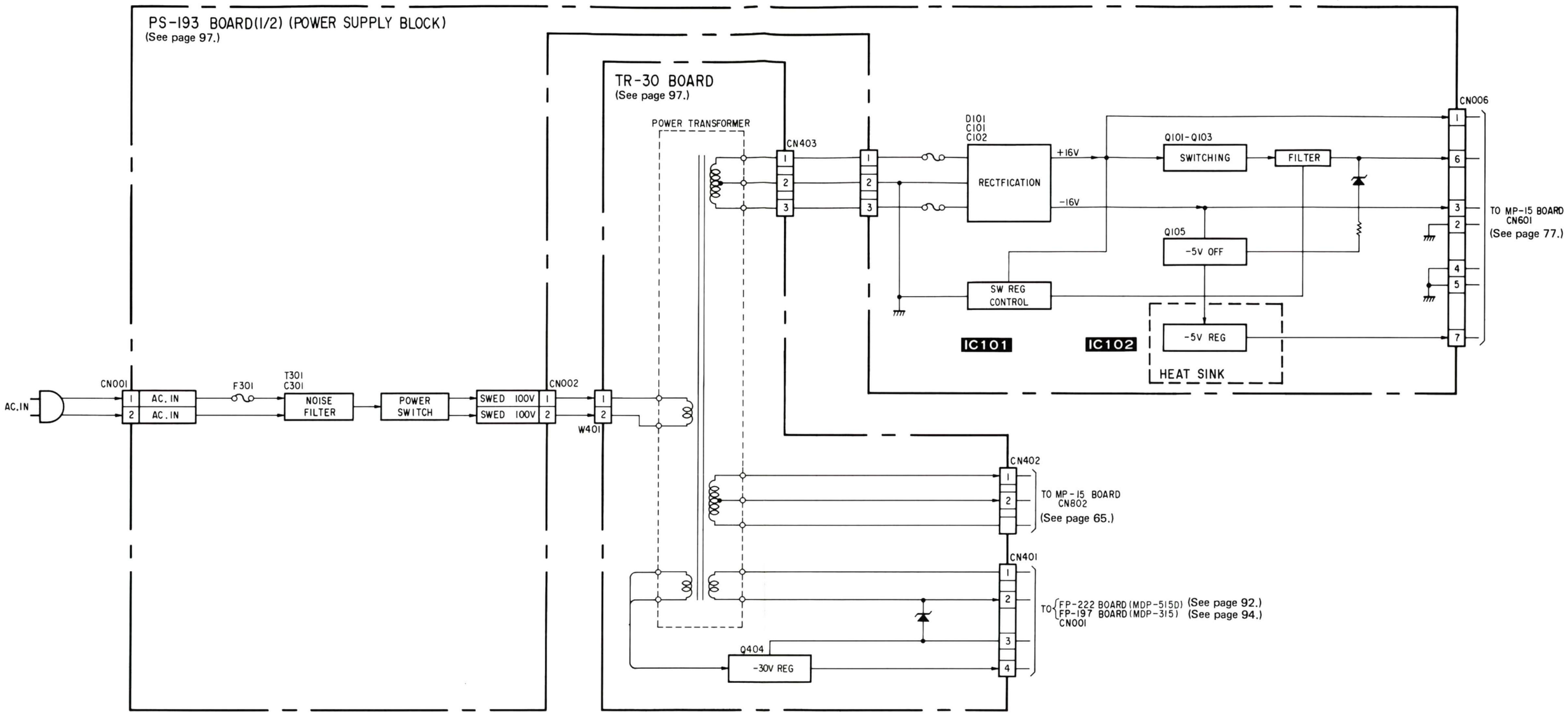

SECTION 4
PRINTED WIRING BOARDS AND SCHEMATIC DIAGRAMS

4-1. FRAME SCHEMATIC DIAGRAM

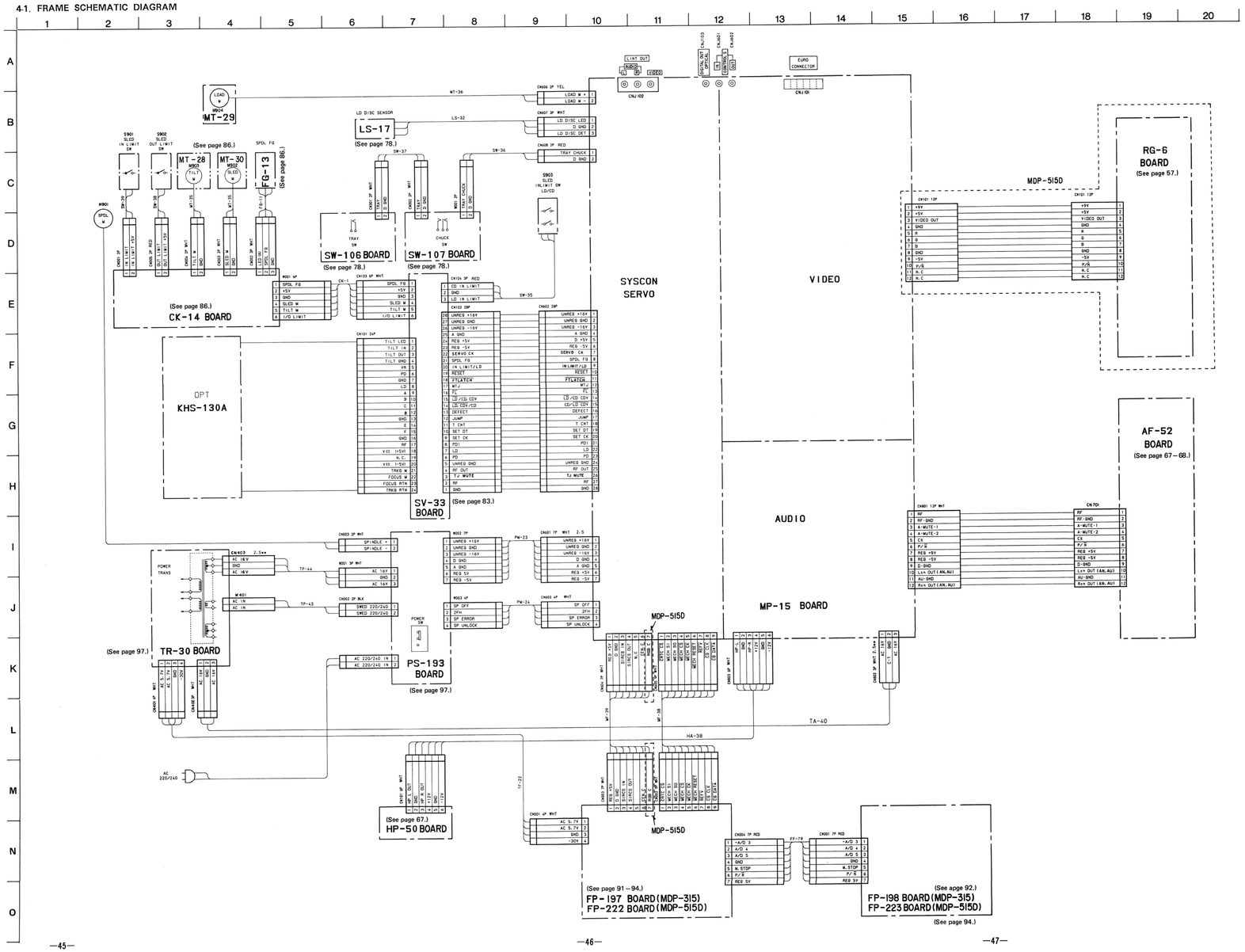

4-2. PRINTED WIRING BOARDS AND SCHEMATIC DIAGRAMS

THIS NOTE IS COMMON FOR PRINTED WIRING BOARDS AND SCHEMATIC DIAGRAMS.
(In addition to this, the nscessary note is printed in each block.)

For printed wiring boards :

- o— : indicates a lead wire mounted on the componet side.
- ● : Through hole.
- : Pattern from the side which enables seeing.
- : Pattern of the rear side.
- ● Circled numbers refer to waveforms.

For schematic diagram :

- Caution when replacing chip parts.
  New parts must be attached after removal of chip.
  Be careful not to heat the minuts side of tantalum capacitor, because it is damaged by the heat.
- All resistors are in ohms, chip resisters are 1/10W unless otherwise noted. kΩ : 1000 Ω, MΩ : 1000k Ω.
- All capacitors are in μ F unless otherwise noted. pF : μ μ F. 50V or less are not indicated except for electrolytics and tantalums.
- All variable and adjustable resistors have characteristic carve B, unless otherwise noted.
- : nonflammable resistor.
- : fusible resistor.
- : panel designation.
- △ : internal component.
- : adjustment for repair.*
- : B+ line.*
- : B– line.*
- Voltages are dc between measurement points and ground unless otherwise noted.*
- Readings are taken with a color-bar signal playback.
- Readings are taken with a digital multimeter (DC10MΩ).
- Voltage variations may be noted due to normal production tolerances.
- : IN/OUT direction of B line (+, –).*
- Readings are taken with color-bar signal playback.
- Circled numbers refer to waveforms.*

When indicating parts by reference number, please include the board name.

Note: The components identified by mark ⚠ or dotted line with mark ⚠ are critical for safety. Replace only with part number specified.

***: indicated by the color red.**

MP-15 BOARD (VIDEO)

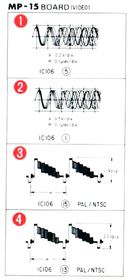

For printed wiring boards :

- ○—— : indicates a lead wire mounted on the componet side.
- ▒▒▒ : Pattern from the side which enables seeing.
- ▒▒▒ : Pattern of the rear side.
- ● : Circled numbers refer to waveforms.
- ○—⏚—○ : Jumper wire connected to the ground pattern on the component side.
- ○—○—○ : Jumper wire connected to the pattern on the component side.

MP-15 BOARD

MP-15, TL-40 (VIDEO) RG-6 (RGB PROCESS) PRINTED WIRING BOARDS

– Ref. No. MP-15 and TL-40 BOARDS: 1,000 Series, RG-6 BOARD (MDP-515D Model only): 6,000 Series –

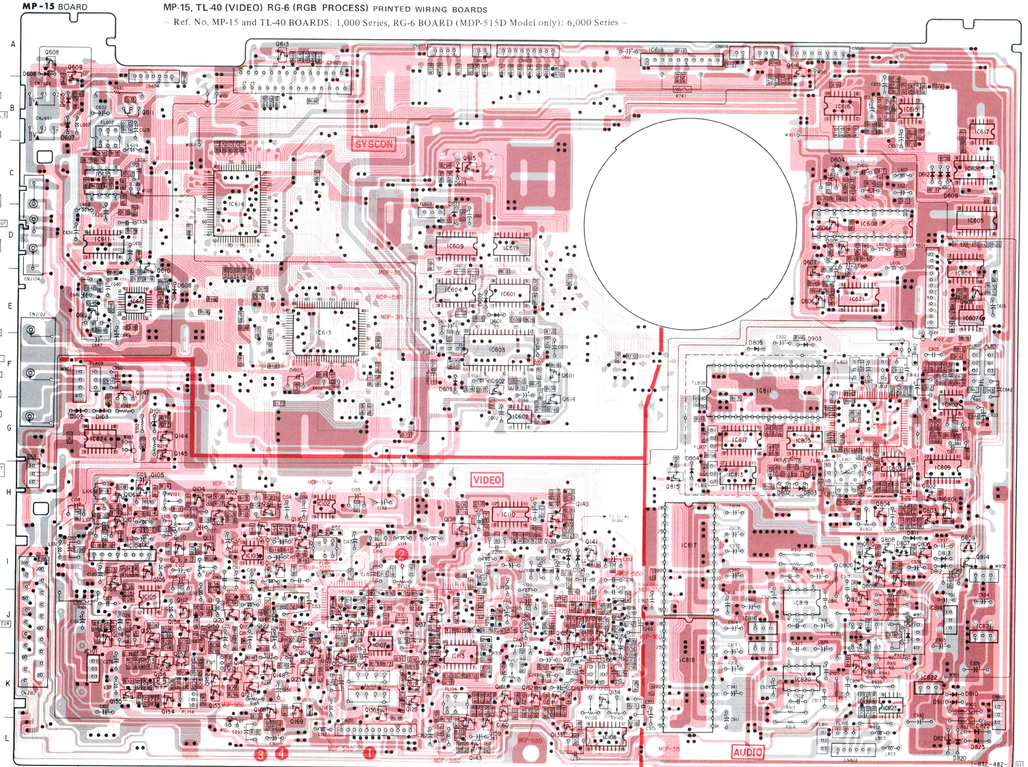

MP-15 BOARD

Q101	G-3	Q105	H-2
Q102	G-1	Q106	H-2
Q103	G-2	Q107	H-2
Q104	I-9	Q108	I-2
Q105	I-9	Q109	I-3
Q601	E-8	Q110	I-3
Q602	E-8	Q111	I-3
Q603	F-7	Q112	J-3
Q604	C-13	Q114	J-2
Q605	B-1	Q115	I-4
Q606	A-1	Q116	I-5
Q607	B-1	Q117	I-5
Q608	E-2	Q118	I-5
Q609	C-15	Q119	J-4
Q610	C-15	Q120	J-4
Q611	D-7	Q121	K-4
Q612	C-15	Q122	J-4
Q613	C-7	Q123	K-5
Q801	G-14	Q124	J-5
Q802	H-12	Q125	K-6
Q803	H-13	Q126	K-7
Q804	G-11	Q128	K-7
Q805	F-12	Q129	K-7
Q806	I-14	Q130	J-3
Q807	I-14	Q131	J-3
Q808	I-15	Q132	K-3
Q811	I-14	Q133	L-9
Q812	I-15	Q134	K-10
Q813	I-15	Q135	J-6
Q815	J-14	Q136	K-6
Q820	L-15	Q137	J-6
Q821	L-15	Q138	H-7
Q822	K-15	Q139	I-9
Q823	L-15	Q140	H-9
D903	F-13	Q141	I-9
D910	K-15	Q142	L-8
D911	K-15	Q143	L-8
		Q144	G-3
IC101	K-2	Q145	G-3
IC102	H-5	Q146	K-4
IC103	I-4	Q147	F-2
IC104	I-2	Q148	K-4
IC105	J-3	Q150	J-4
IC106	J-6	Q151	K-4
IC107	J-6	Q152	K-4
IC108	L-10	Q153	K-4
IC109	J-8	Q154	K-3
IC110	H-8	Q155	K-2
IC111	J-10	Q156	K-3
IC113	J-7	Q157	K-3
IC601	D-8	Q158	J-3
IC602	G-8	Q159	L-8
IC603	F-8	Q160	K-8
IC604	E-7	Q161	K-8
IC605	D-15	Q162	K-9
IC606	D-15	Q163	K-9
IC607	E-15	Q164	J-10
IC608	D-14	Q165	J-9
IC609	D-7	Q166	J-10
IC610	C-2	Q167	J-9
IC611	D-2	Q168	K-8
IC612	E-2	Q169	K-5
IC613	E-5	Q601	F-9
IC614	C-4	Q602	F-8
IC615	B-14	Q603	D-15
IC616	B-13	Q604	D-13
IC617	B-15	Q605	D-13
IC618	A-10	Q606	E-13
IC619	D-8	Q607	D-13
IC620	C-15	Q608	A-1
IC621	E-14	Q609	A-1
IC623	G-14	Q610	D-2
IC802	G-15	Q611	B-2
IC803	G-14	Q612	E-2
IC805	G-13	Q613	A-5
IC809	H-15	Q614	F-9
IC811	F-12	Q615	C-7
IC812	G-12	Q616	A-13
IC813	H-12	Q801	H-15
IC814	J-15	Q802	H-15
IC816	J-12	Q803	H-15
IC817	I-11	Q804	H-14
IC818	K-11	Q805	I-15
IC819	J-13	Q807	I-14
IC820	K-13	Q808	I-14
IC821	J-15	Q809	I-14
IC822	K-15	Q810	I-14
IC823	K-14	Q811	I-14
IC824	C-2	Q812	J-14
		Q813	K-14
Q102	H-4	Q814	I-15
Q103	H-4	Q815	H-11
Q104	H-3		

VIDEO VIDEO

TL-40 BOARD

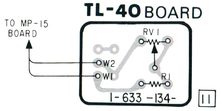

RG-6 BOARD

D131	D-14	Q107	E-7
D132	D-13	Q108	F-7
D133	E-15	Q109	D-2
D134	F-15	Q110	C-2
		Q111	D-11
IC101	C-8	Q112	D-12
IC102	B-3	Q113	B-9
IC103	E-13	Q114	B-14
IC104	F-8	Q115	C-13
IC105	E-3	Q116	C-13
		Q117	B-13
Q101	B-7	Q118	B-12
Q102	C-6	Q119	B-12
Q103	B-8	Q120	A-13
Q104	C-4	Q121	B-12
Q105	E-4	Q122	B-11
Q106	E-6	Q123	B-10

RG-6 BOARD

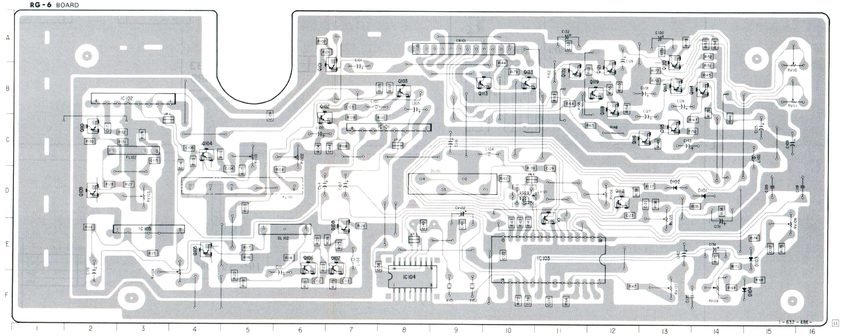

VIDEO VIDEO

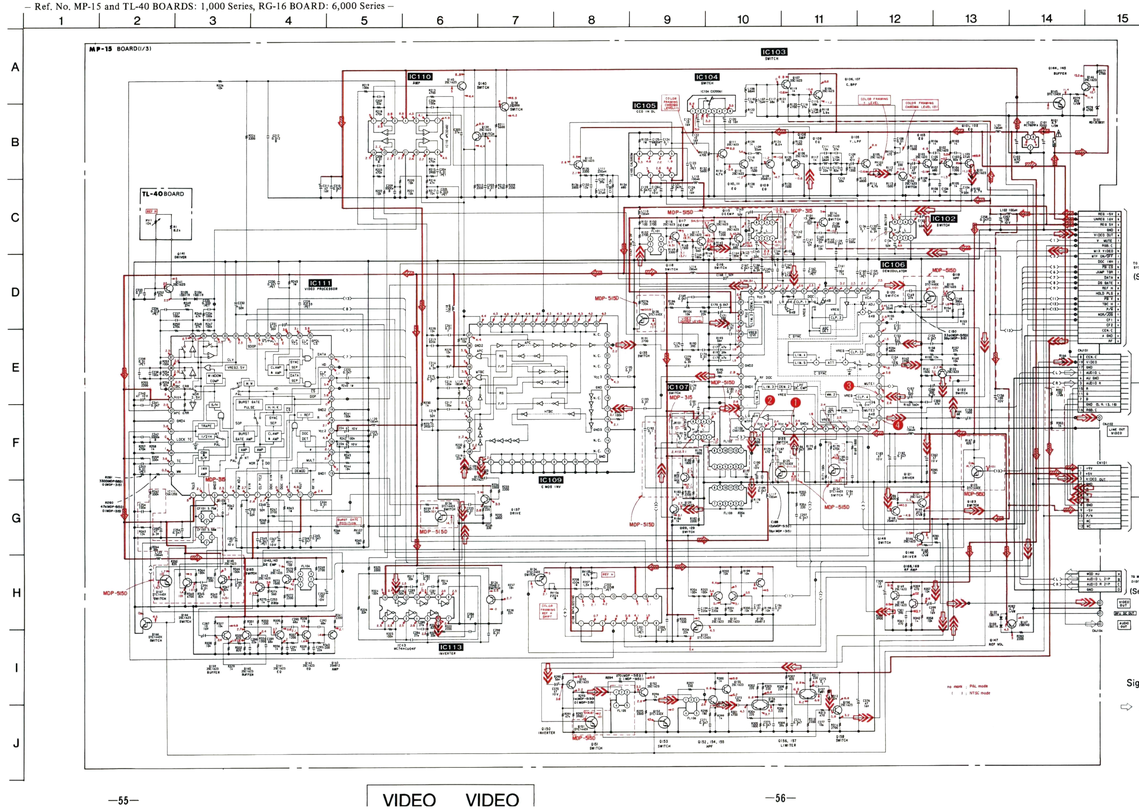

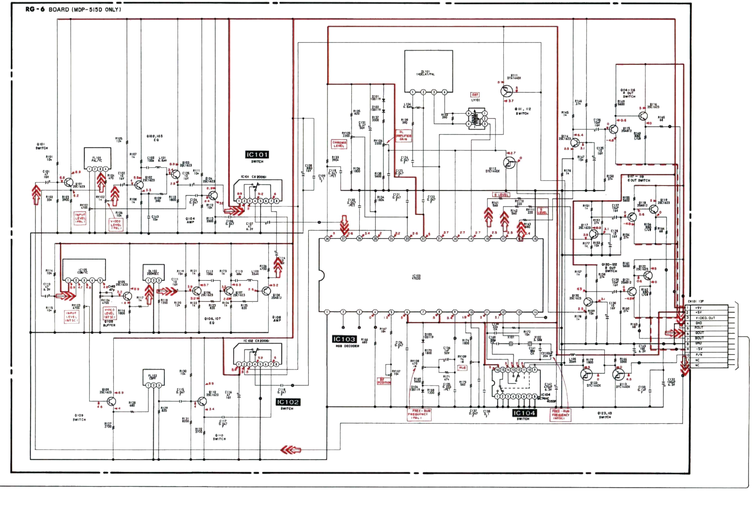

IC103 V7020

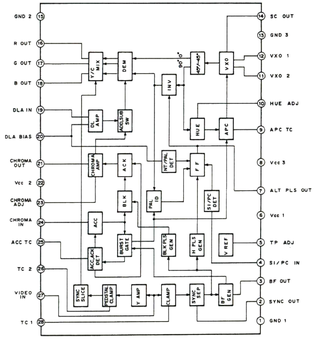

IC105 CXL5003M

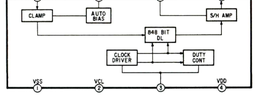

IC108 SN74LS22INS

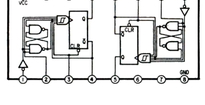

MP-15 (DIGITAL AUDIO, AUDIO OUTPUT), HP-50 (HEADPHONE AMP), AF-52 (ANALOG AUDIO) PRINTED WIRING BOARDS

– Ref. No. MP-15 BOARD: 1,000 Series, HP-50 BOARD: 6,000 Series, AF-52 BOARD: 8,000 Series –

For printed wiring boards :

- o—— : indicates a lead wire mounted on the componet side.
- (grey pattern) : Pattern from the side which enables seeing.
- (pink pattern) : Pattern of the rear side.
- ● Circled numbers refer to waveforms.
- o—┿—o : Jumper wire connected to the ground pattern on the component side.
- o—●—o : Jumper wire connected to the pattern on the component side.

MP-15 BOARD

D101	G-3	Q105	H-2
D102	G-1	Q106	H-2
D103	G-2	Q107	H-2
D104	I-9	Q108	I-2
D105	I-9	Q109	I-3
D601	E-8	Q110	I-3
D602	E-8	Q111	I-3
D603	F-7	Q112	J-3
D604	C-13	Q114	J-2
D605	B-1	Q115	I-4
D606	A-1	Q116	I-5
D607	B-1	Q117	I-5
D608	E-3	Q118	I-5
D609	C-15	Q119	J-4
D610	C-15	Q120	J-4
D611	D-7	Q121	K-4
D612	C-15	Q122	J-4
D613	C-7	Q123	K-5
D801	G-14	Q124	J-5
D802	H-12	Q125	K-6
D803	H-13	Q126	K-7
D804	G-11	Q128	K-7
D805	F-12	Q129	K-7
D806	I-14	Q130	J-3
D807	I-14	Q131	J-3
D808	I-15	Q132	K-3
D811	I-14	Q133	L-9
D812	I-15	Q134	K-10
D813	I-15	Q135	J-6
D815	J-14	Q136	K-6
D820	L-15	Q137	J-6
D821	L-15	Q138	H-7
D822	K-15	Q139	I-9
D823	L-15	Q140	H-9
D903	F-13	Q141	I-9
D910	K-15	Q142	L-8
D911	K-15	Q143	L-8
		Q144	G-3
IC101	K-2	Q145	G-3
IC102	H-5	Q146	K-4
IC103	I-4	Q147	F-2
IC104	I-2	Q148	K-4
IC105	J-3	Q150	J-4
IC106	J-6	Q151	K-4
IC107	J-6	Q152	K-4
IC108	L-10	Q153	K-4
IC109	J-8	Q154	K-3
IC110	H-8	Q155	K-2
IC111	J-10	Q156	K-3
IC113	J-7	Q157	K-3
IC601	D-8	Q158	J-3
IC602	G-8	Q159	L-8
IC603	F-8	Q160	K-8
IC604	E-7	Q161	K-8
IC605	D-15	Q162	K-9
IC606	D-15	Q163	K-9
IC607	E-15	Q164	J-10
IC608	D-14	Q165	J-9
IC609	D-7	Q166	J-10
IC610	C-2	Q167	J-9
IC611	D-2	Q168	K-4
IC612	E-2	Q169	K-5
IC613	E-5	Q601	F-9
IC614	C-4	Q602	F-8
IC615	B-14	Q603	E-15
IC616	B-13	Q604	D-13
IC617	B-15	Q605	D-13
IC618	A-10	Q606	E-13
IC619	D-8	Q607	D-13
IC620	C-15	Q608	A-1
IC621	E-14	Q609	A-1
IC801	G-14	Q610	D-3
IC802	G-15	Q611	B-2
IC803	G-14	Q612	E-2
IC805	G-13	Q613	A-5
IC809	H-15	Q614	F-9
IC811	F-12	Q615	C-7
IC812	G-12	Q618	A-13
IC813	H-12	Q801	H-15
IC814	J-15	Q802	H-15
IC816	J-12	Q803	H-15
IC817	I-11	Q804	H-14
IC818	K-11	Q806	I-15
IC819	J-13	Q807	I-14
IC820	K-13	Q808	I-14
IC821	J-15	Q809	I-14
IC822	K-15	Q810	I-14
IC823	K-14	Q811	I-14
IC824	G-2	Q812	J-14
		Q813	K-14
Q102	H-4	Q814	I-15
Q103	H-4	Q815	H-11
Q104	H-3		

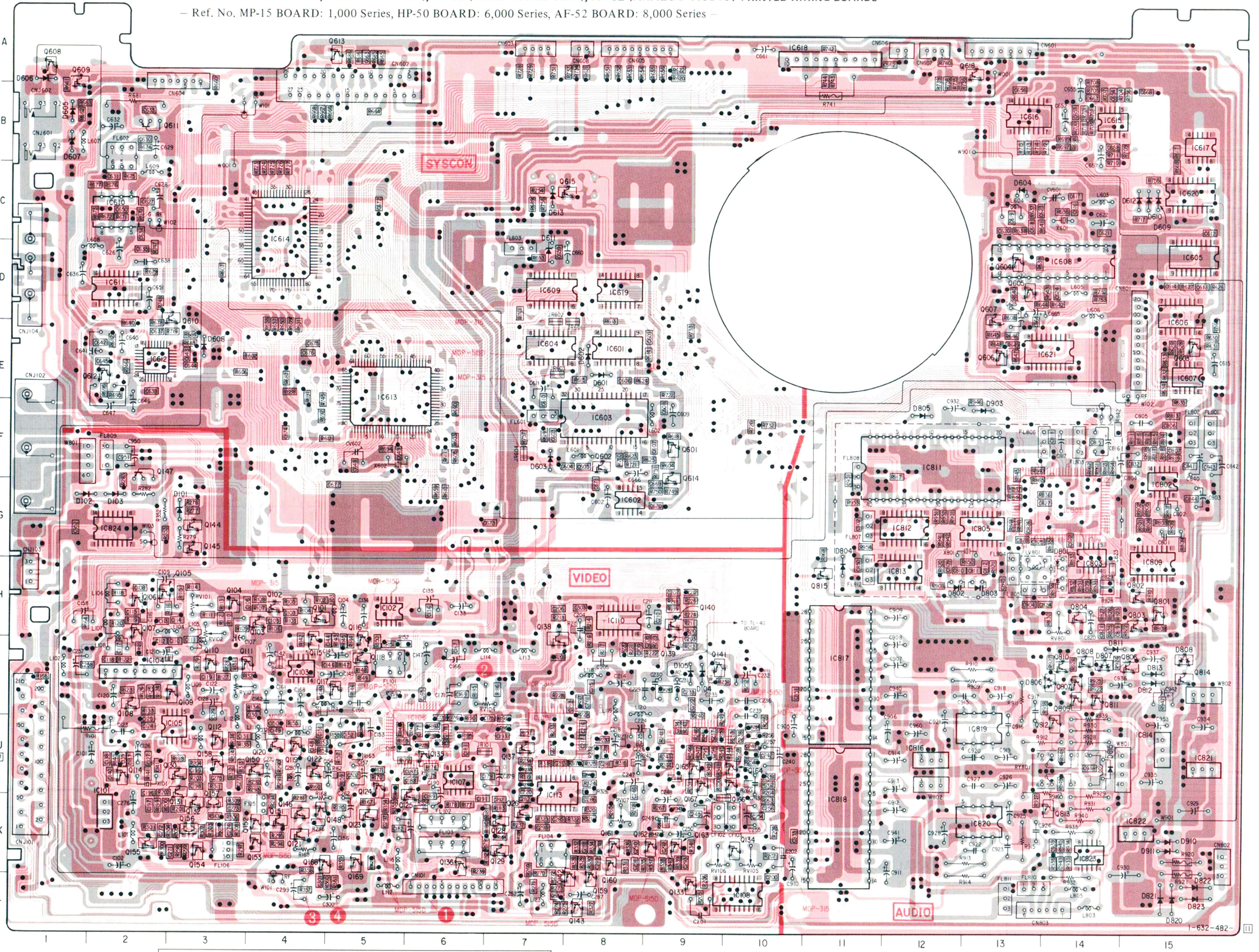

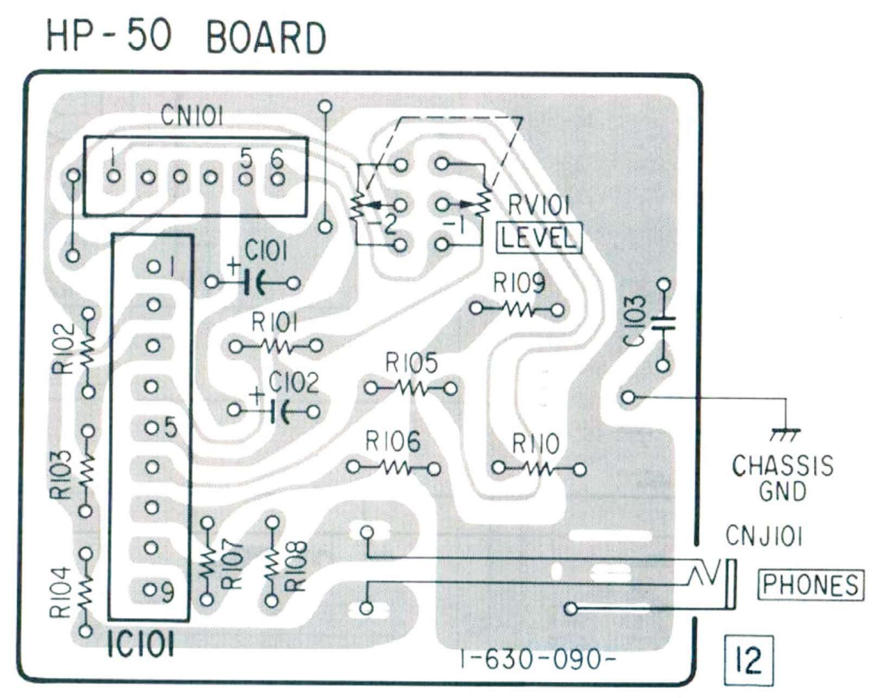

AF-52 BOARD

IC401	B-7
IC402	A-7
IC701	B-13
Q401	D-7
Q402	B-3
Q403	C-3
Q404	B-3
Q405	B-1
Q406	B-1
Q407	B-8
Q408	A-5
Q409	B-5
Q410	B-5
Q411	C-4
Q412	B-4
Q701	C-10
Q702	A-9
Q703	A-9
Q704	B-8
Q705	D-13
Q706	A-14

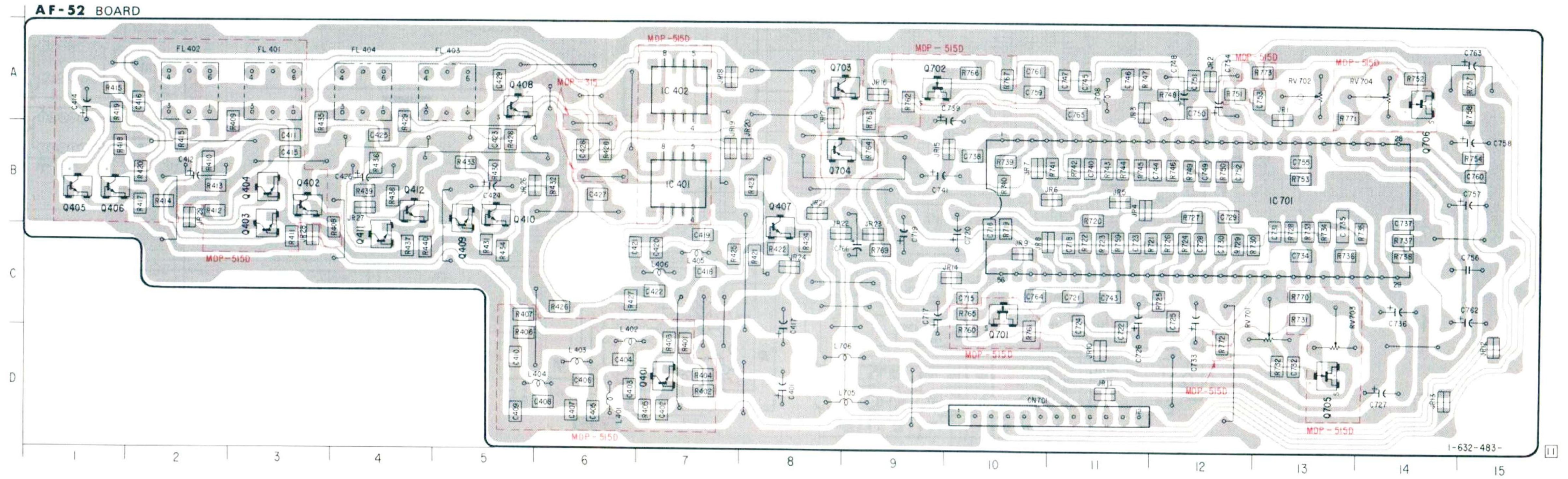

MP-15 BOARD

MP-15 (SYSTEM CONTROL, SPINDLE SERVO), SW-106 (TRAY SWITCH), LS-17 (LD SENSOR), SW-107 (CHUCK SWITCH), MT-29 (LOADING MOTOR) PRINTED WIRING BOARDS

– Ref. No. MP-15 BOARD: 1,000 Series, SW-107 and MT-29 BOARDS: 2,000 Series, LS-17 BOARD: 3,000 Series, SW-106 BOARD: 5,000 Series –

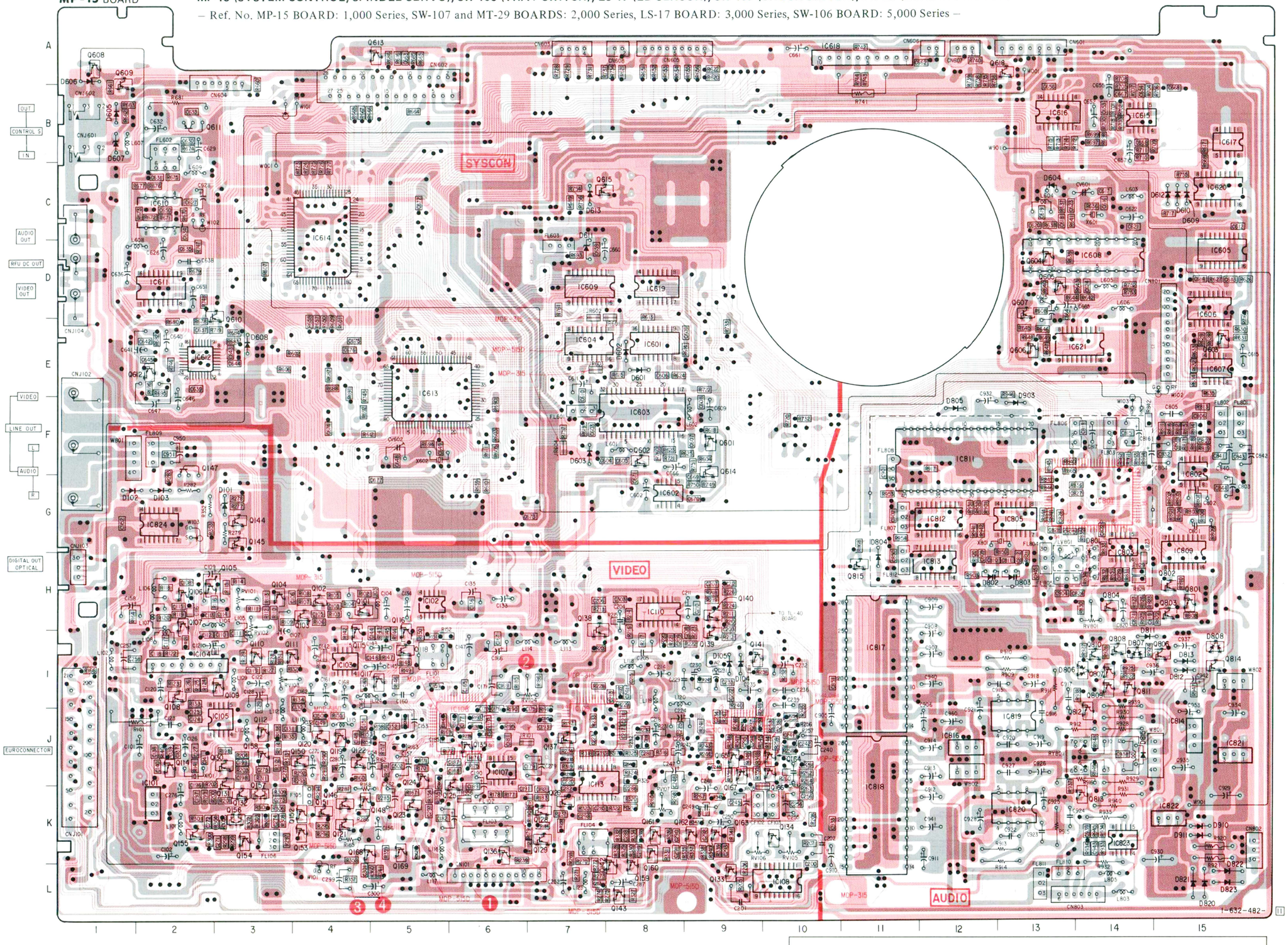

MP-15 BOARD (SYSCON)

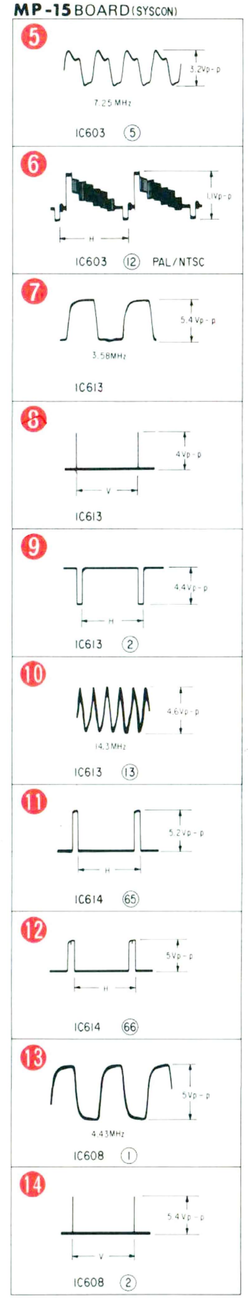

SYSTEM CONTROL SYSTEM CONTROL

MP-15 (1/3) (DIGITAL AUDIO, AUDIO OUTPUT), HP-50 (HEADPHONE AMP), AF-52 (ANALOG AUDIO) SCHEMATIC DIAGRAM

– Ref. No. MP-15 BOARD: 1,000 Series, HP-50 BOARD: 6,000 Series, AF-52 BOARD: 6,000 Series –

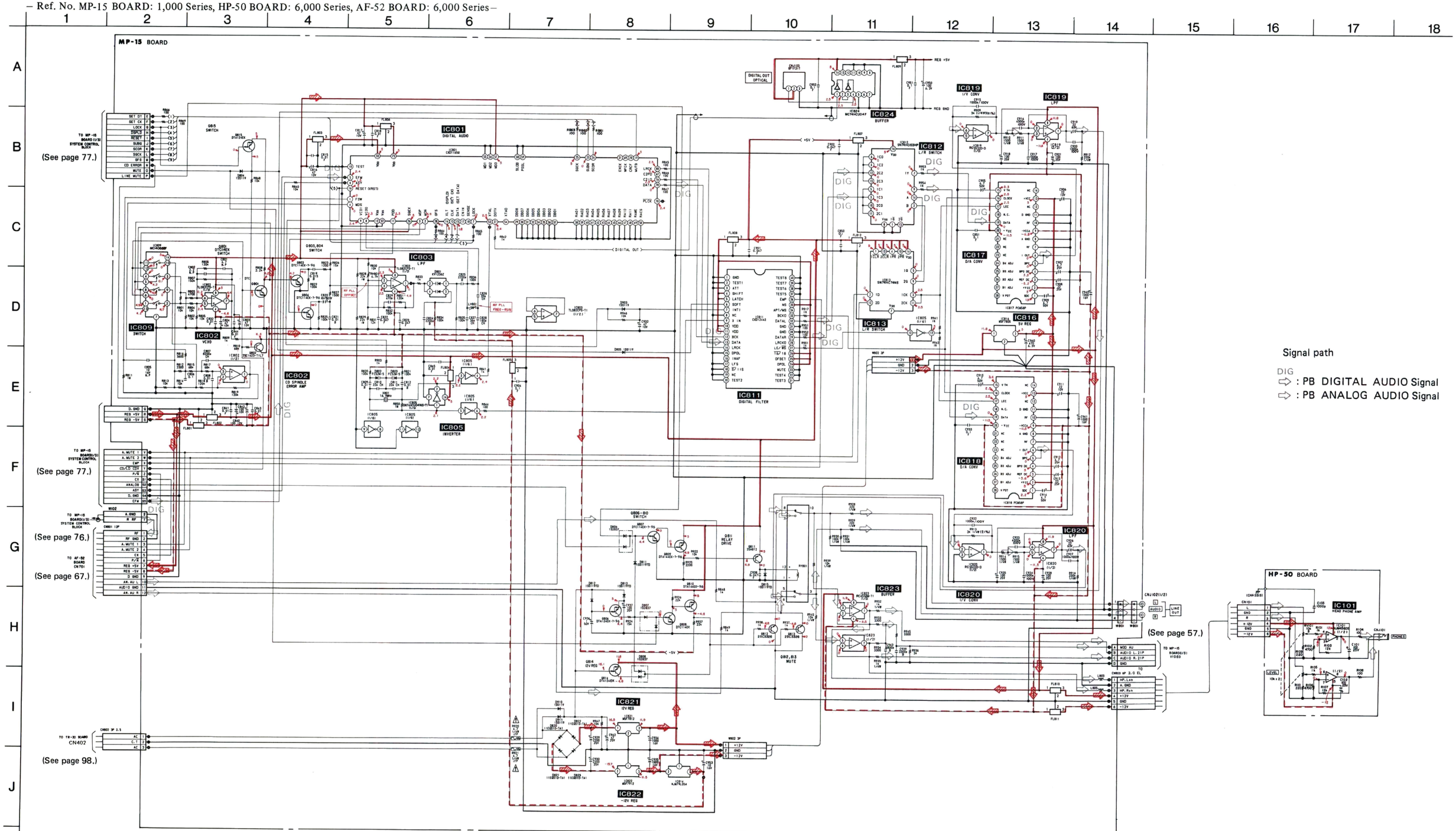

DIGITAL AUDIO DIGITAL AUDIO

AF-52 (ANALOG AUDIO) SCHEMATIC DIAGRAM

– Ref. No. AF-52 BOARD: 8,000 Series –

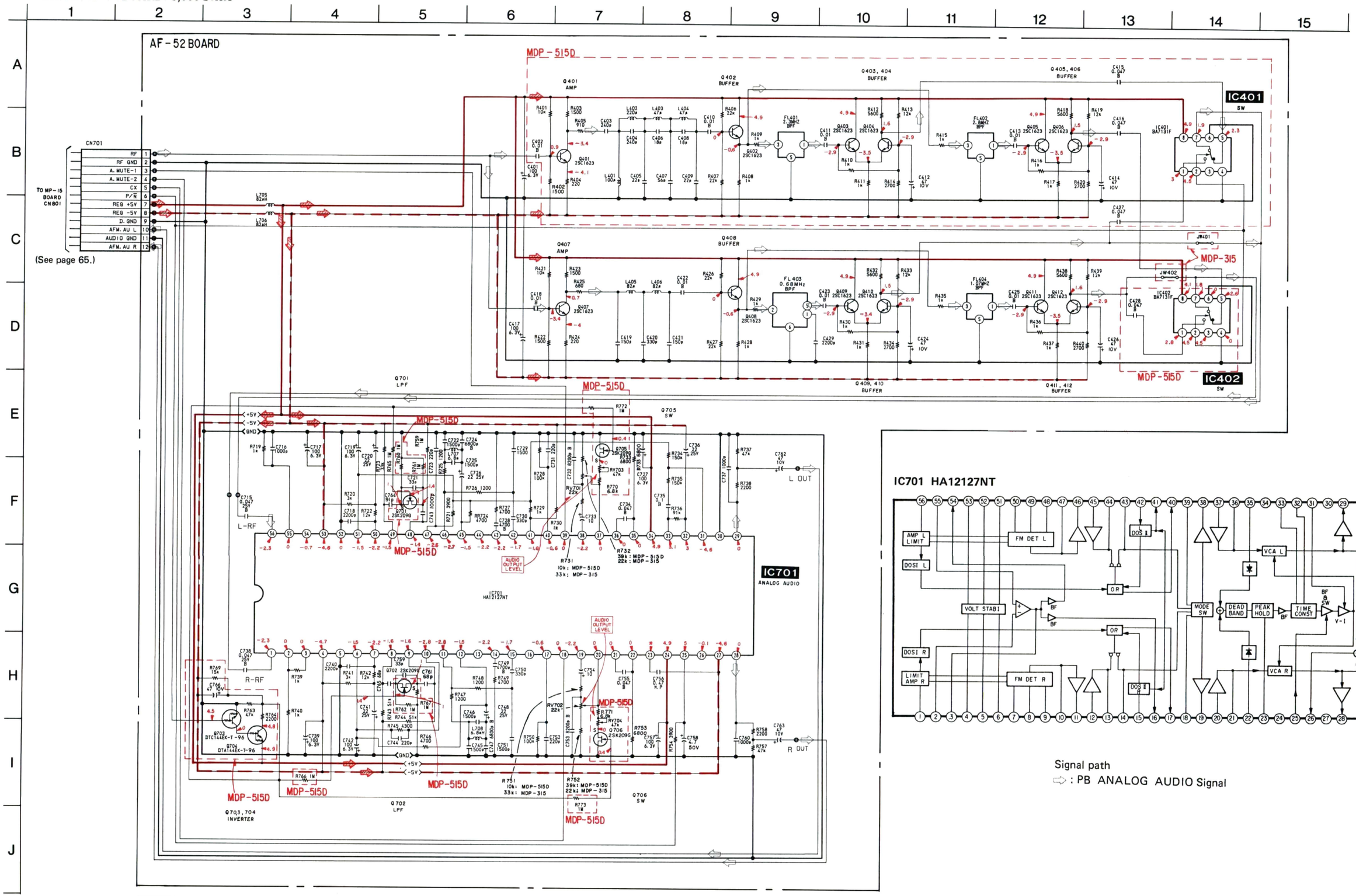

IC701 HA12127NT

Signal path

⇨ : PB ANALOG AUDIO Signal

ANALOG AUDIO ANALOG AUDIO

MP-15 (1/3) (SYSTEM CONTROL, SPINDLE SERVO), SW-106 (TRAY SWITCH), LS-17 (LD SENSOR), SW-107 (CHUCK SWITCH), MT-29 (LOADING MOTOR) SCHEMATIC DIAGRAMS

– Ref. No. MP-15 BOARD: 1,000 Series, SW-107 and MT-29 BOARDS: 2,000 Series, LS-17 BOARD: 3,000 Series, SW-106 BOARD: 5,000 Series –

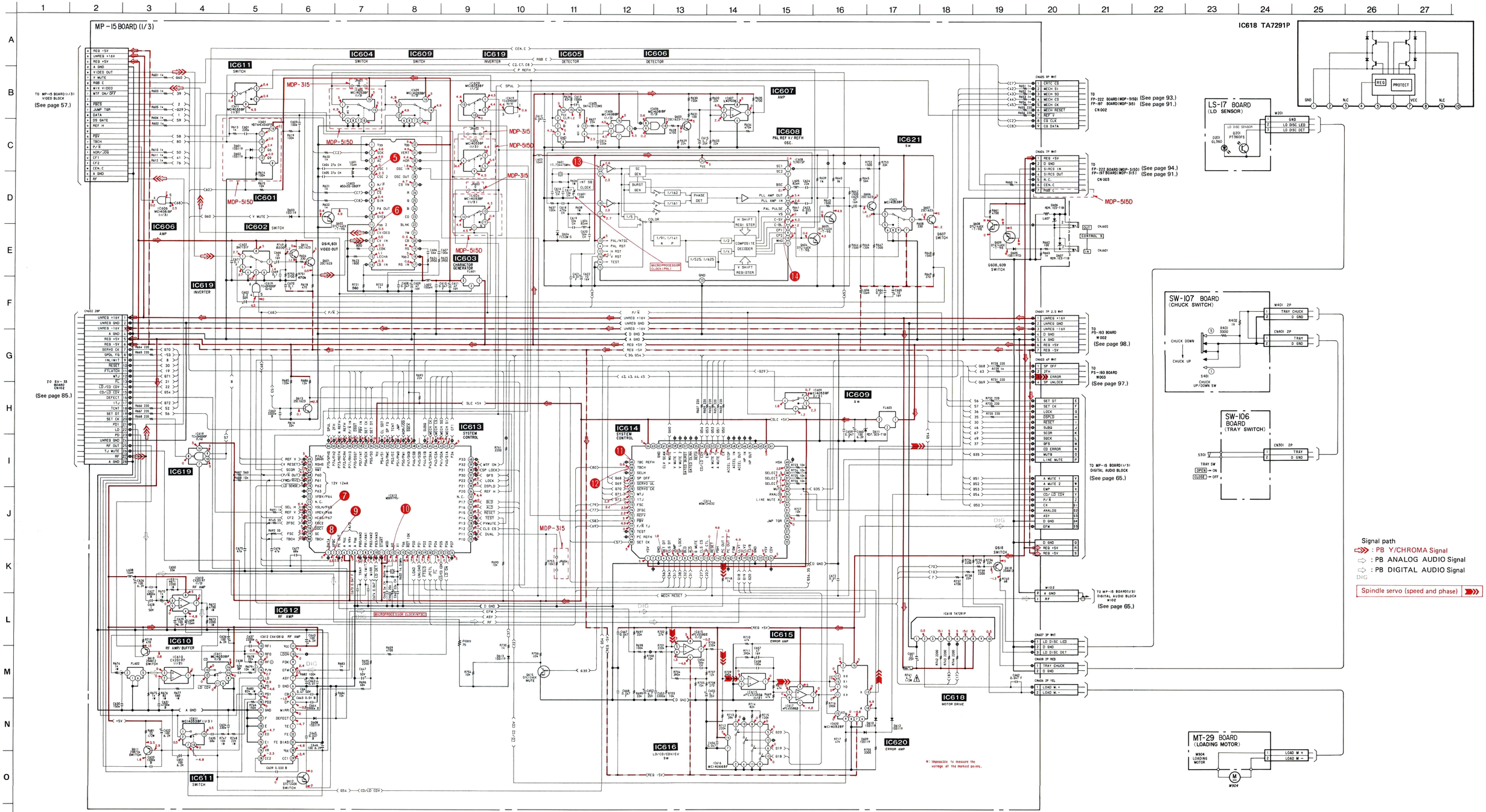

MT-28 BOARD

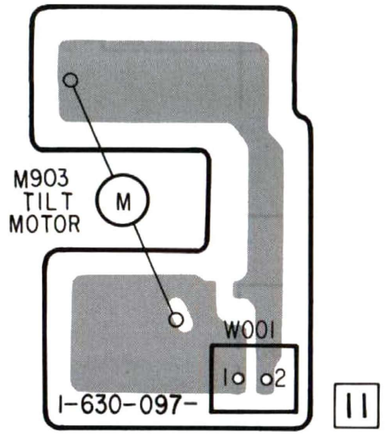

FG-13 BOARD

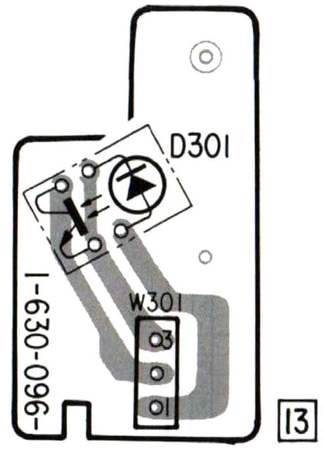

SV-33 BOARD (SERVO)

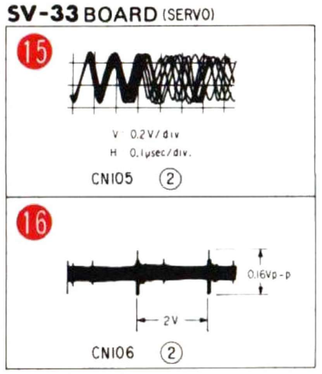

SV-33 BOARD

D101	E-5
D102	B-6
D103	C-4
IC102	B-4
IC103	D-4
IC104	D-5
IC106	A-2
IC107	B-6
IC108	A-6
IC109	B-8
IC110	A-8
IC111	C-6
Q101	F-2
Q102	E-1
Q103	F-2
Q104	F-2
Q105	F-2
Q106	B-6
Q107	E-3

MT-30 BOARD

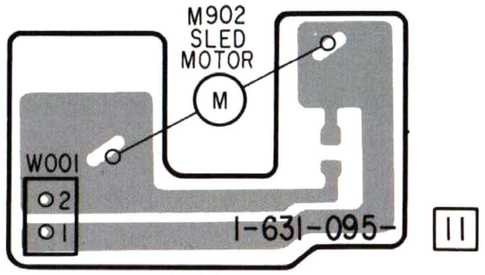

CK-14 BOARD

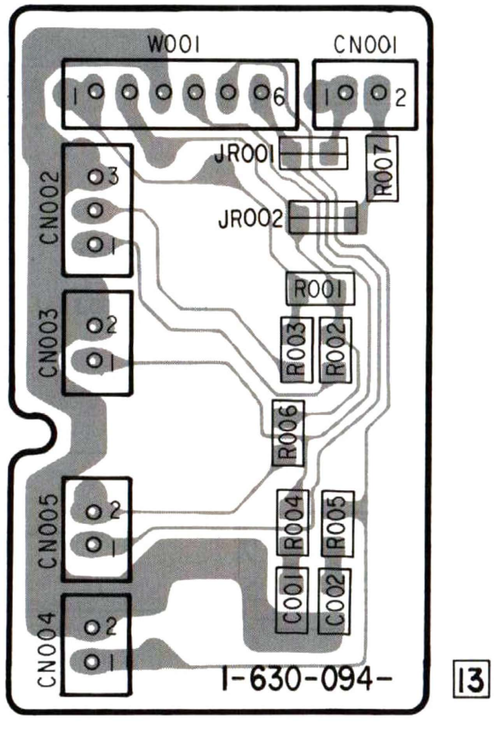

For printed wiring boards :

- o— : indicates a lead wire mounted on the componet side.
- : Pattern from the side which enables seeing.
- : Pattern of the rear side.
- ● Circled numbers refer to waveforms.
- : Jumper wire connected to the ground pattern on the component side.
- : Jumper wire connected to the pattern on the component side.

SV-33 (SERVO), FG-13 (SPINDLE FG), CK-14 (MOTOR RELAY), MT-30 (TILT MOTOR), MT-28 (SLED MOTOR) PRINTED WIRING BOARDS

– Ref. No. SV-33 and CK-14 BOARDS: 7,000 Series, MT-30 BOARD: 5,000 Series, FG-13 and MT-28 BOARDS: 3,000 Series –

SV-33 BOARD

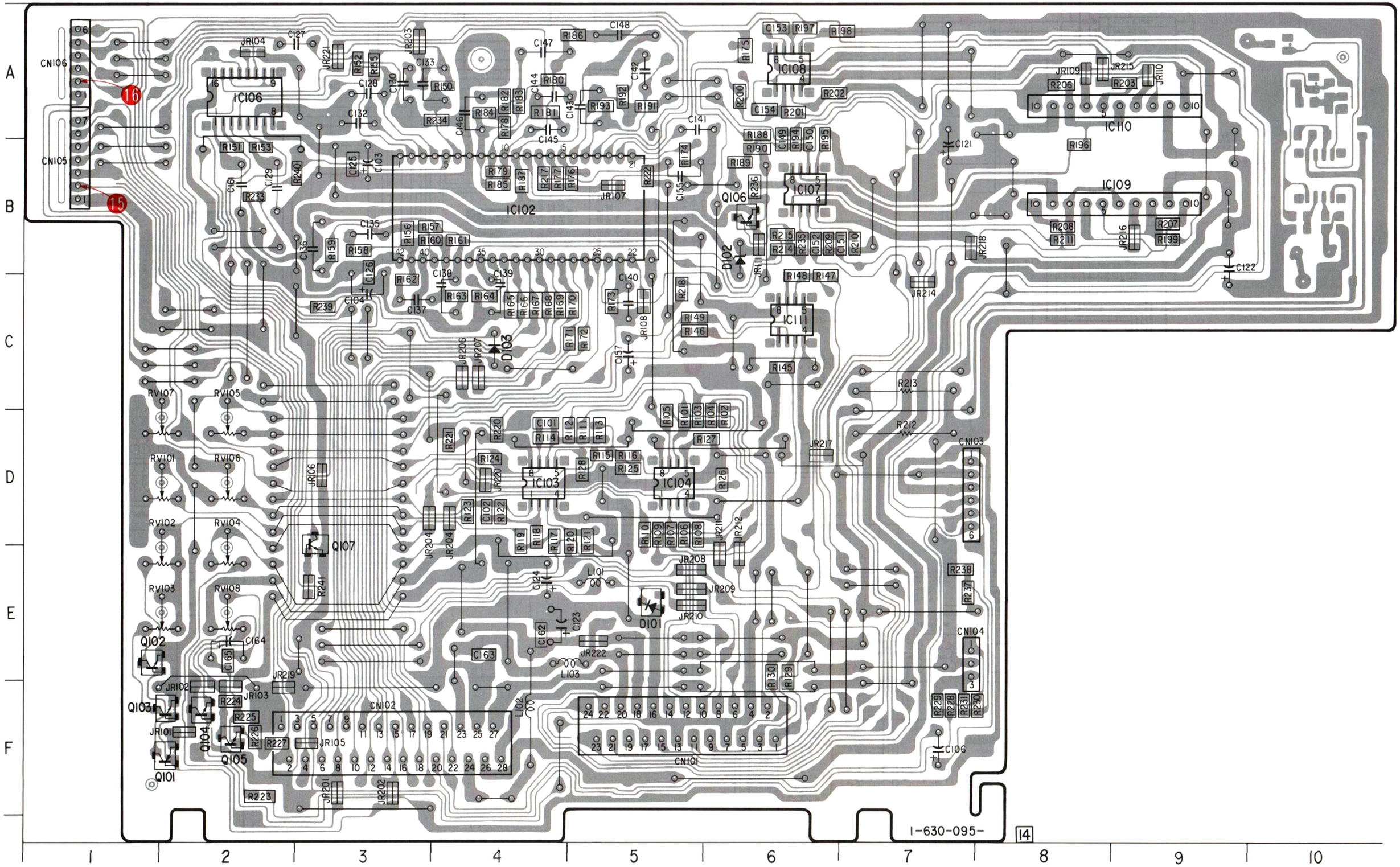

SERVO SERVO

SV-33 (SERVO), FG-13 (SPINDLE FG), CK-14 (MOTOR RELAY), MT-30 (TILT MOTOR), MT-28 (SLED MOTOR) SCHEMATIC DIAGRAM BOARDS

– Ref. No. SV-33 and CK-14 BOARDS: 7,000 Series, MT-30 BOARD: 5,000 Series, FG-13 and MT-28 BOARDS: 3,000 Series –

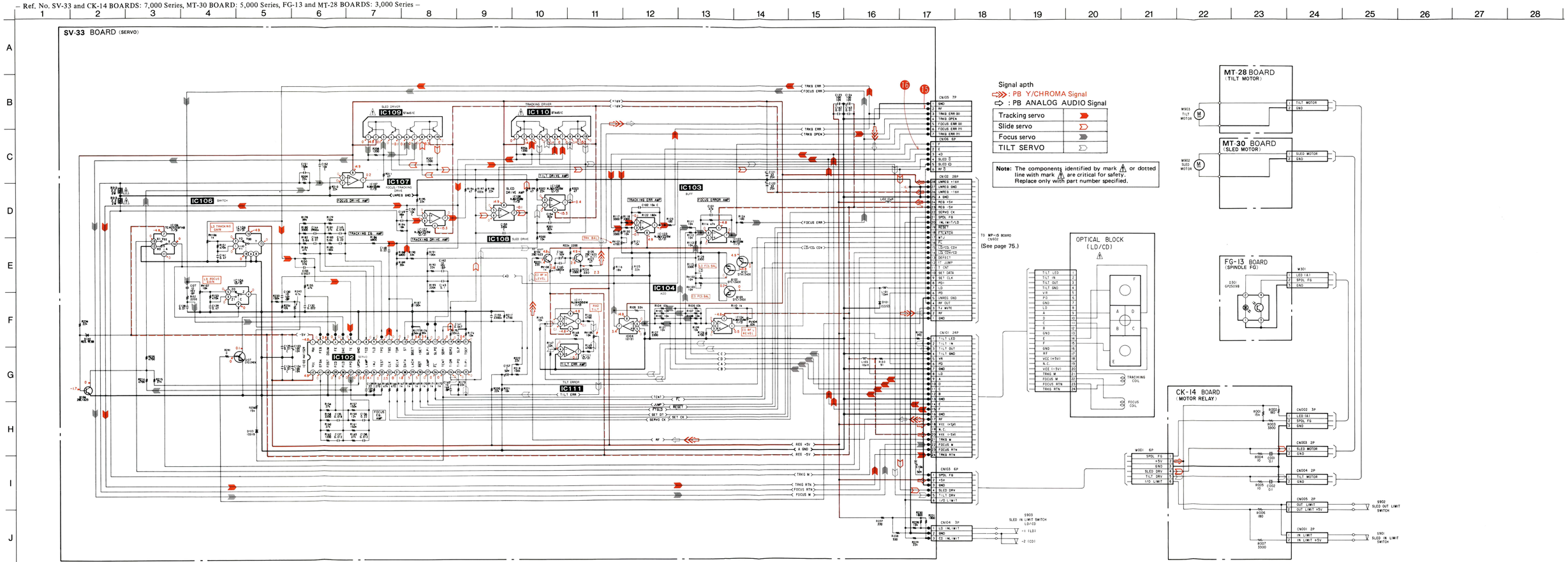

(MDP-315 Model only)

FG-197 (MODE/FUNCTION CONTROL), FP-198 (FUNCTION SWITCH) PRINTED WIRING BOARDS

– Ref. No. FP-197 BOARD: 4,000 Series, FP-198 BOARD: 5,000 Series –

FP-197 BOARD

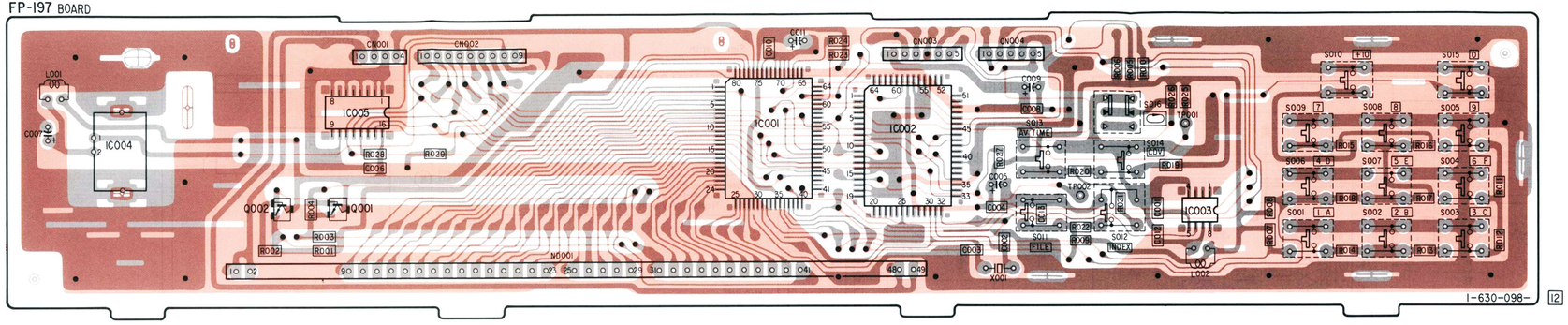

FP-198 BOARD (CONDUCTOR SIDE)

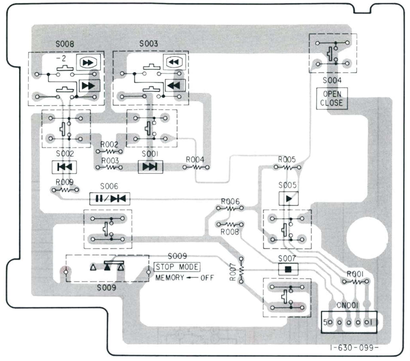

(MDP-515D Model only)

FP-222 (MODE/FUNCTION CONTROL), FP-223 (FUNCTION SWITCH) PRINTED WIRING BOARDS

– Ref. No. FP-222 BOARD: 4,000 Series, FP-223 BOARD: 5,000 Series –

FP-222 BOARD

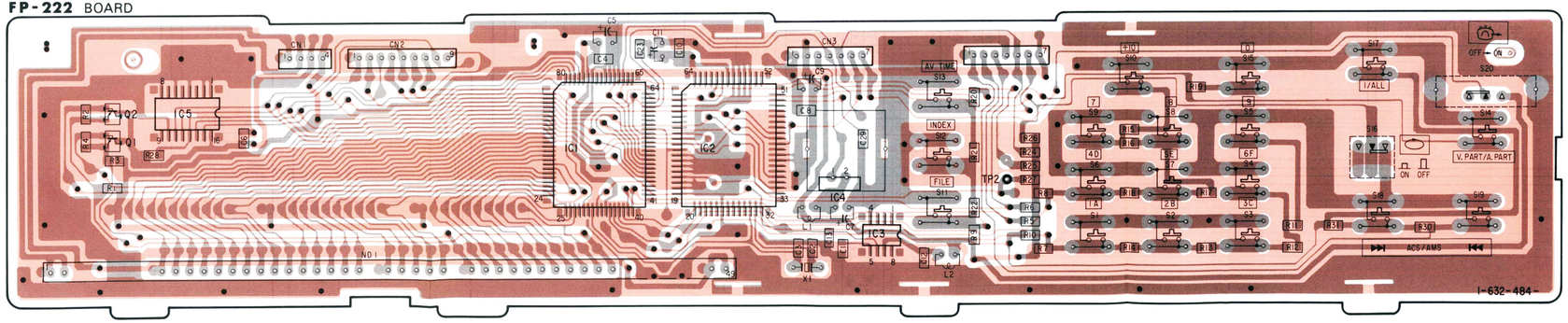

FP-223 BOARD (CONDUCTOR SIDE)

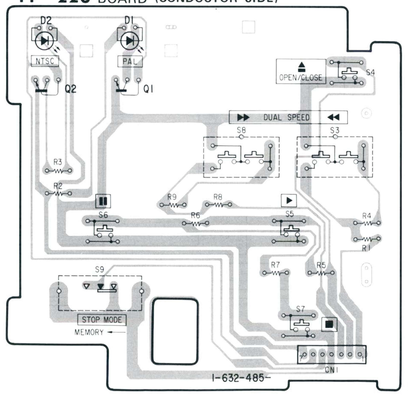

FUNCTION DISPLAY FUNCTION DISPLAY

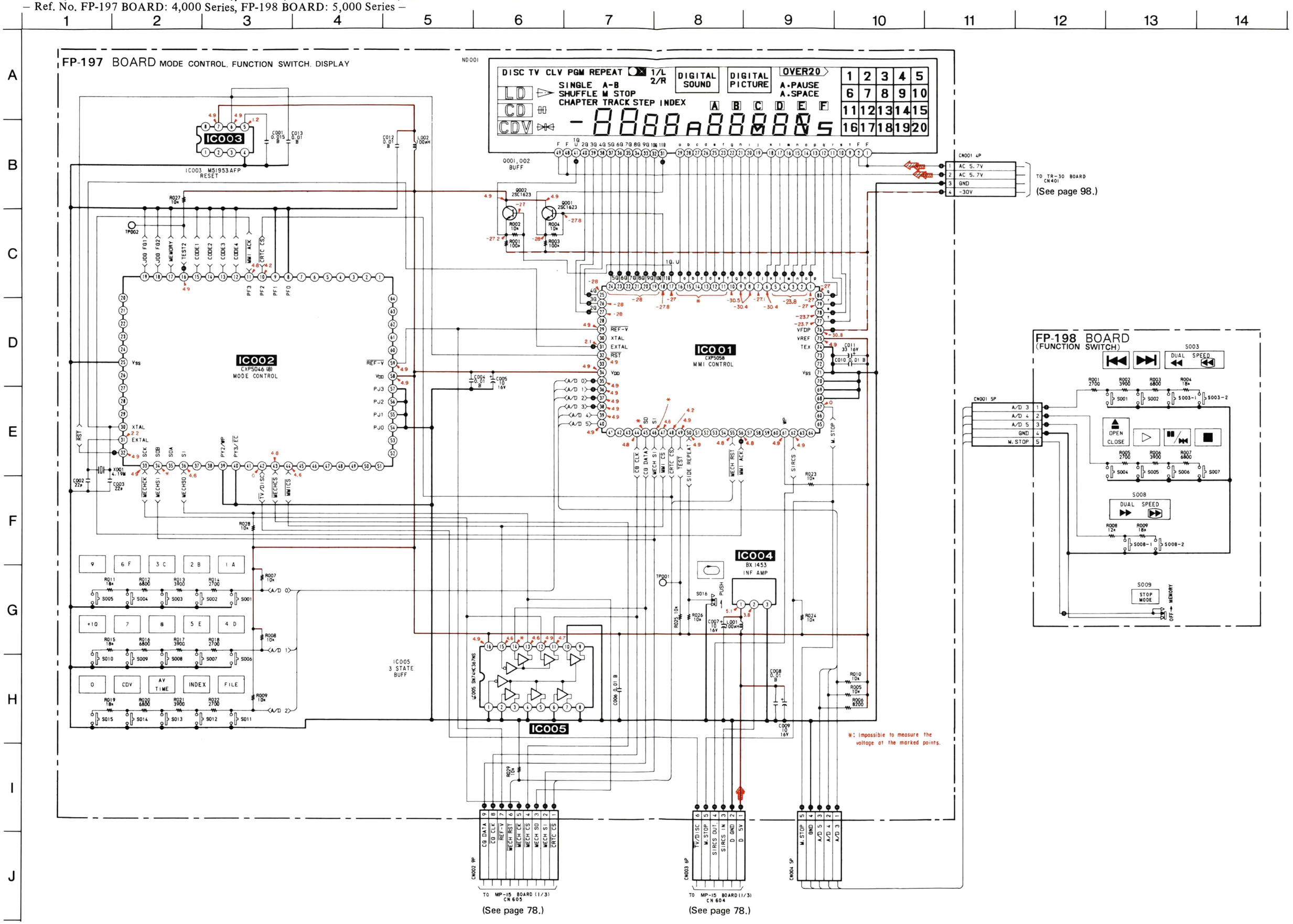

FUNCTION DISPLAY FUNCTION DISPLAY

(MDP-515 Model only)

FP-222 (MODE/FUNCTION CONTROL), FP-223 (FUNCTION SWITCH) SCHEMATIC DIAGRAMS

– Ref. No. FP-222 BOARD: 4,000 Seires, FP-223 BOARD: 5,000 Series –

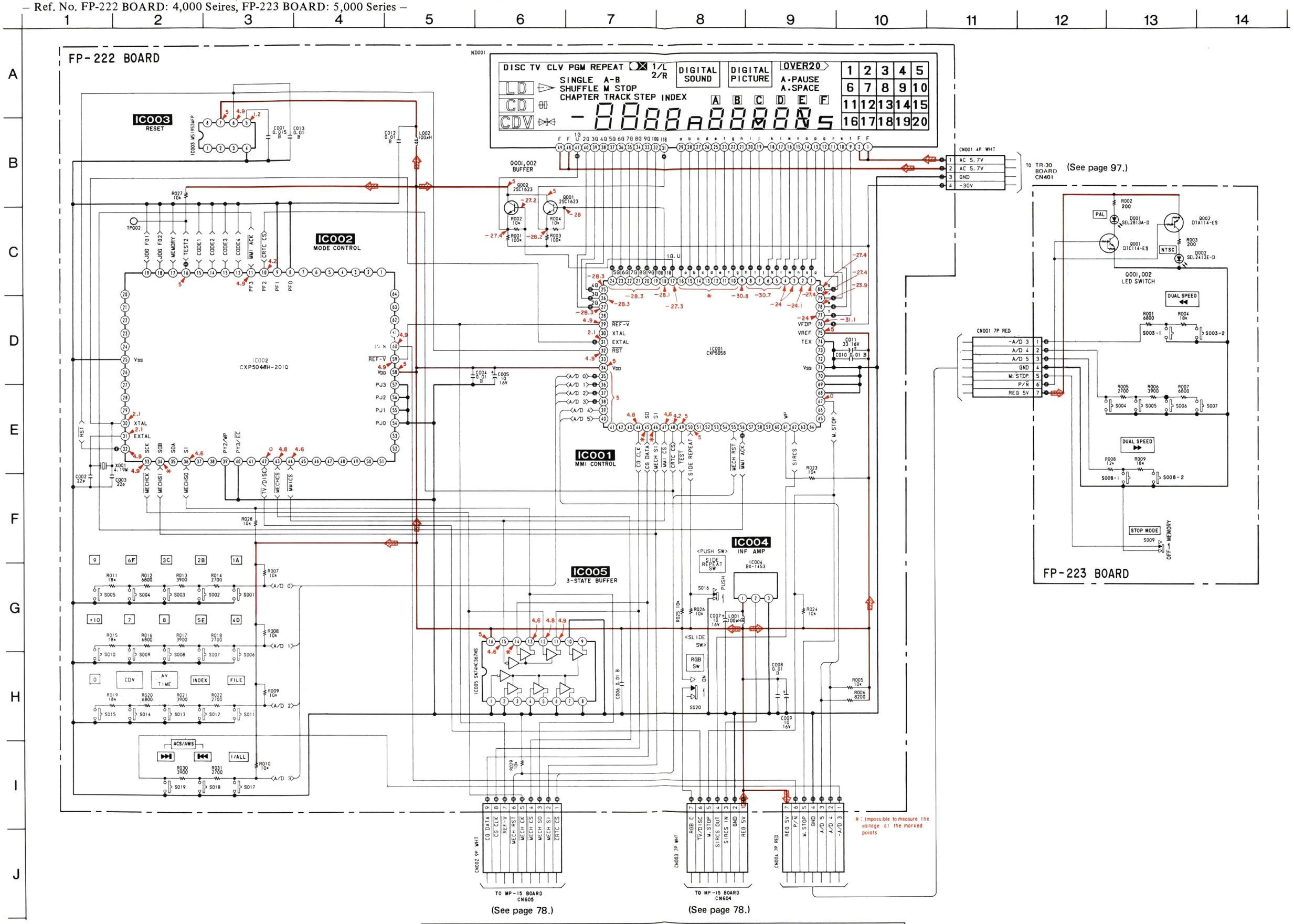

FUNCTION DISPLAY FUNCTION DISPLAY

PS-193 (POWER SUPPLY, SPINDLE SERVO), TR-30 (POWER TRANSFORMER) PRINTED WIRING BOARDS

– Ref. No. PS-193 BOARD: 2,000 Series, TR-30 BOARD: 3,000 Series –

PS-193 BOARD

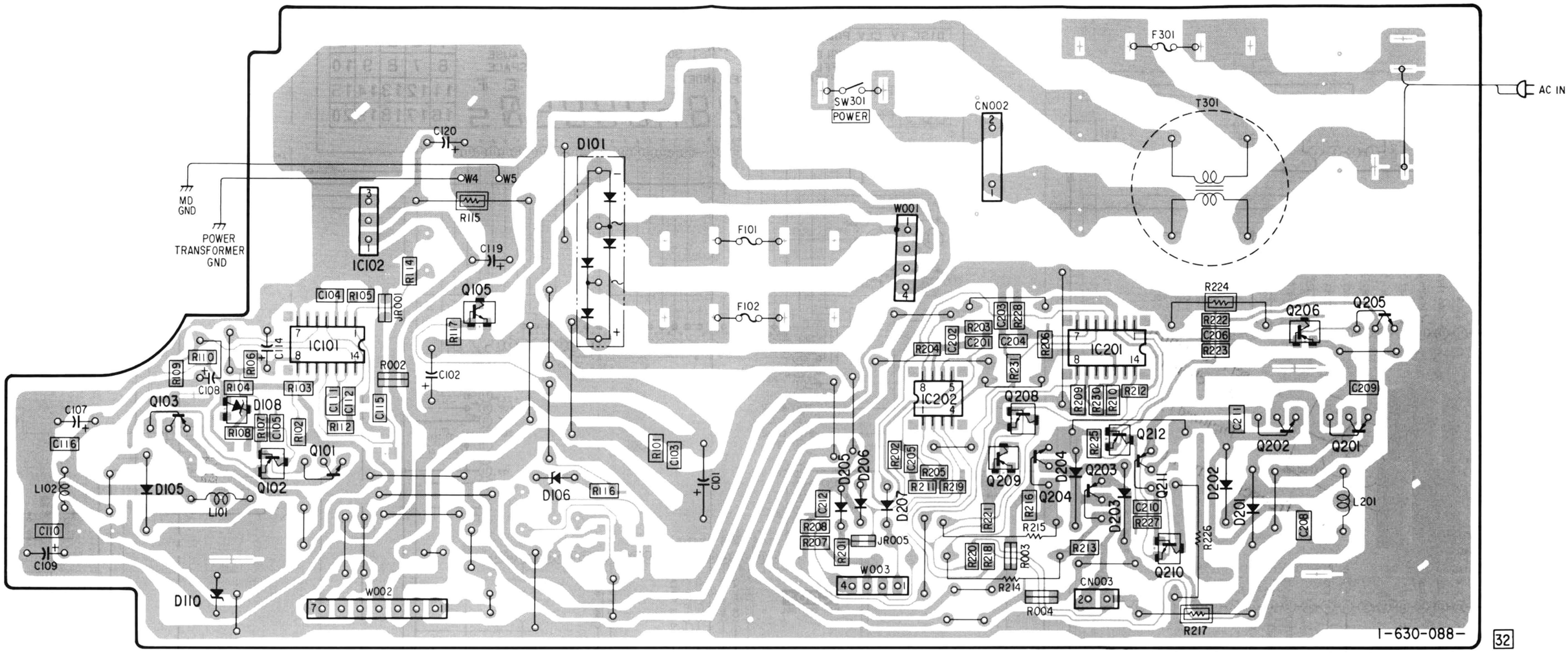

TR-30 BOARD

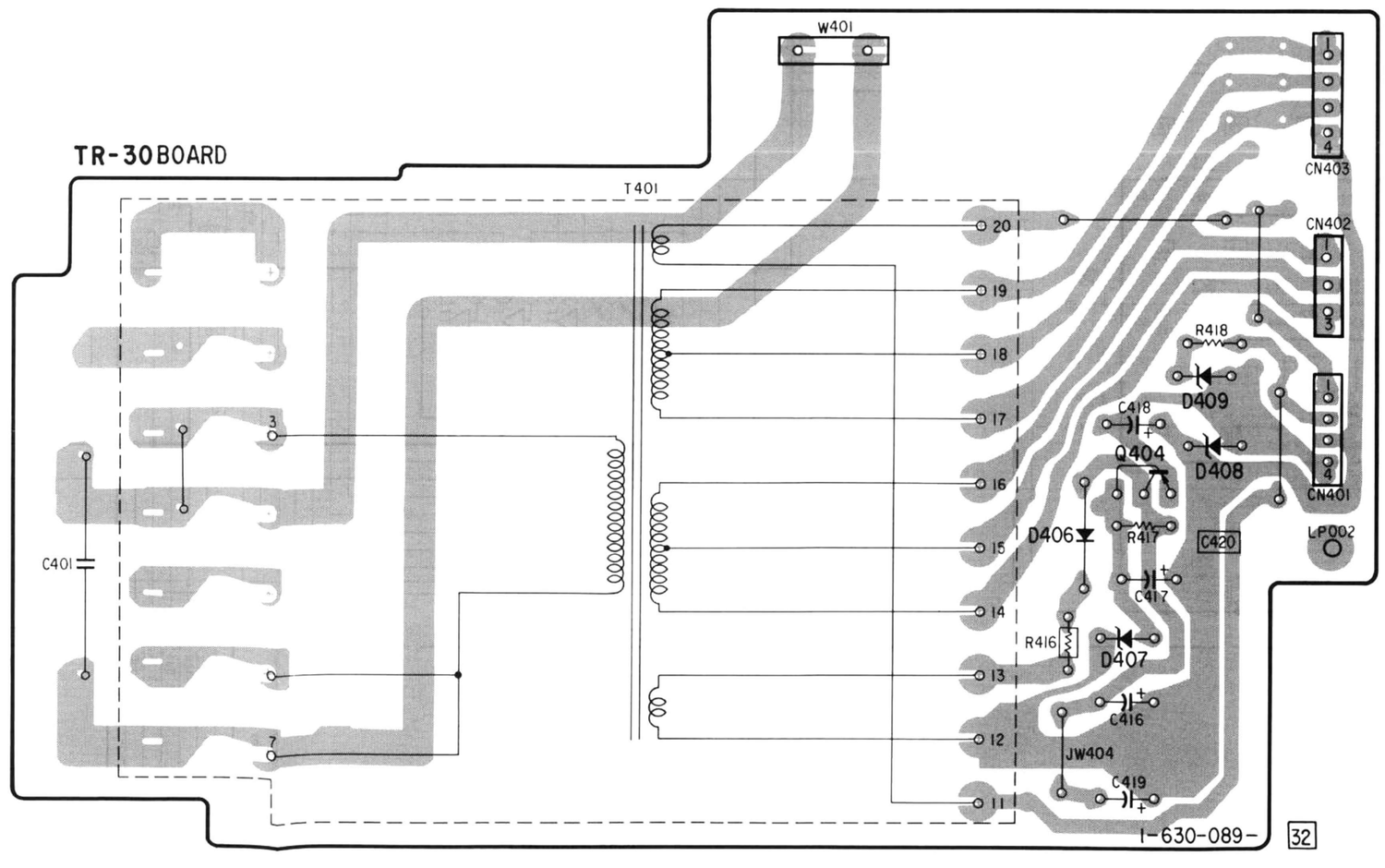

POWER POWER

– Ref. No. PS-193 BOARD: 2,000 Series, TR-30 BOARD: 3,000 Series –

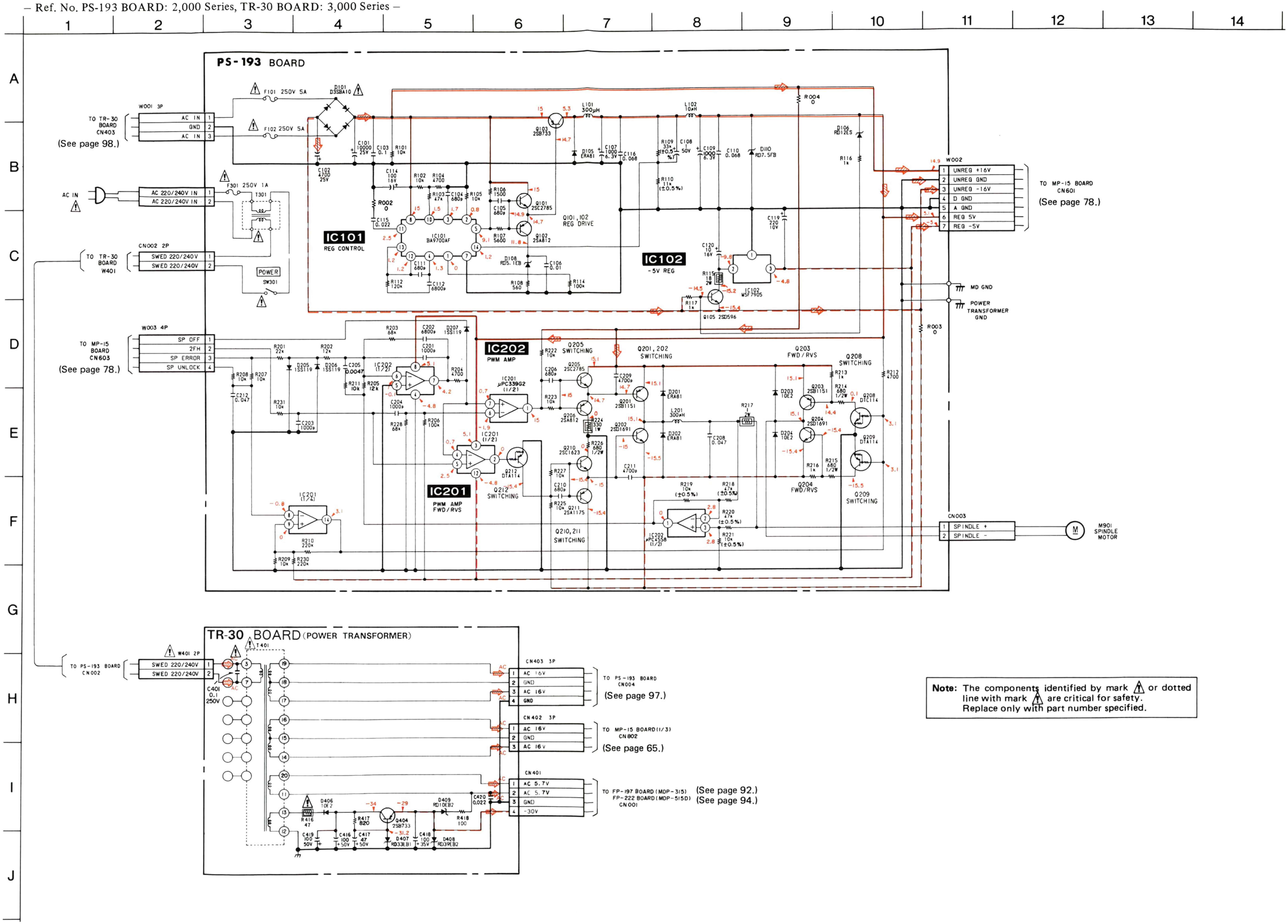

Note: The components identified by mark ⚠ or dotted line with mark ⚠ are critical for safety. Replace only with part number specified.

SEMICONDUCTORS

CX20061

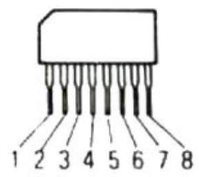

CXA1081Q

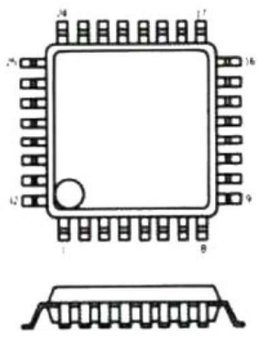

CXA1254Q
CXA1255Q
CXD1152

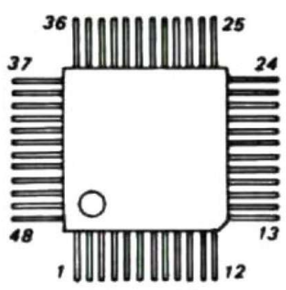

CXD1165Q
CXP5058H
MB89795-119

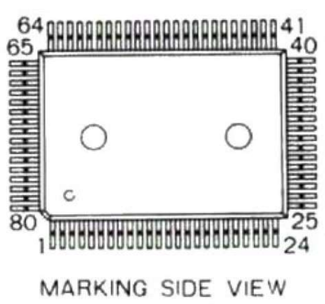

M5F7905
M5F7912

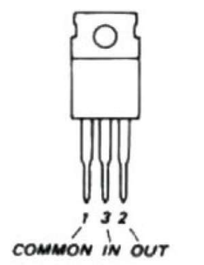

NJM45605-D

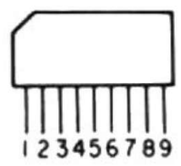

NJM79L05A

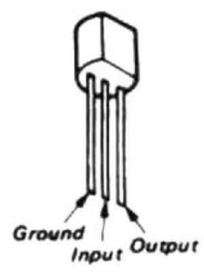

STA-451C

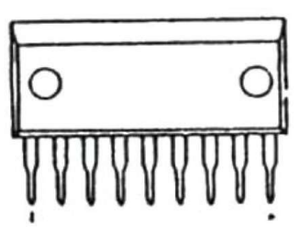

TA7291P

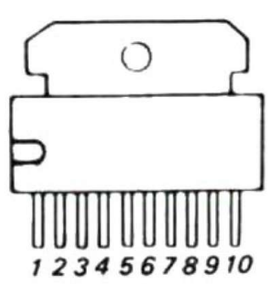

2SB740

2SB1151

2SD655-E

2SK669

DTA114ES
DTC114ES

FC52M-5

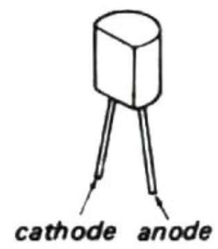

KV1236D

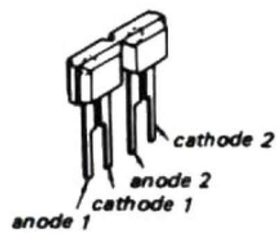

SEL2413E

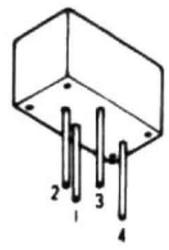

SEL2813A-D

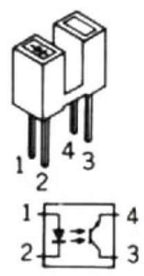

CXP5048H
CXP5048H-DCX

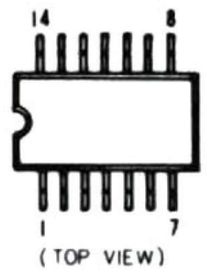

M5F7805
M5F7812

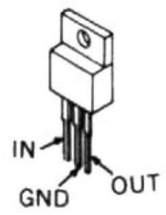

2SA1175-HFE
2SC2785-HFE

2SB733-2
2SB733-4
2SB734-34

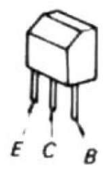

D3SBA10

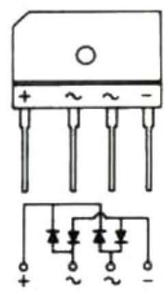

Precautions for replacementof MP-15 BOARD

As a repair part of MP-15 BOARD only MP-15 BOARD for the MDP-515D is supplied. To mount this type board on the MDP-315, the following arragement should be made:

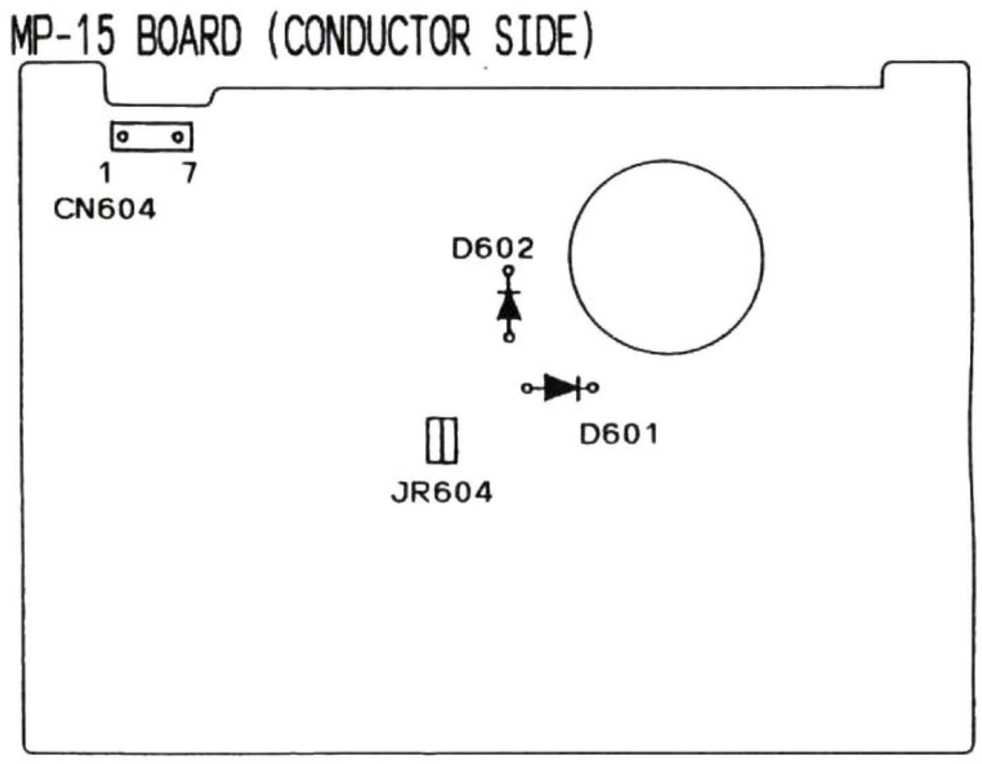

1. Plug the connector from FP-197 BOARD into CN604 aligning ① -pin sides of them.
2. Remove D601 and D602.
3. Mount JR604 (0Ω).

www.hifiengine.com

SECTION 5
EXPLODED VIEWS

NOTE:

- The mechanical parts with no reference number in the exploded views are not supplied.
- The construction parts of an assembled part are indicated with a collation number in the remark column.
- Items marked "★" are not stocked since they are seldom required for routine service. Some delay should be anticipated when ordering these items.
- Due to standardization, parts with part number suffix -XX and -X may be different from the parts specified in the components used on the set.

The components identified by mark ⚠ or dotted line with mark ⚠ are critical for safety.
Replace only with part number specified.

5-1. EXTERIOR ORNAMENT ASSEMBLY

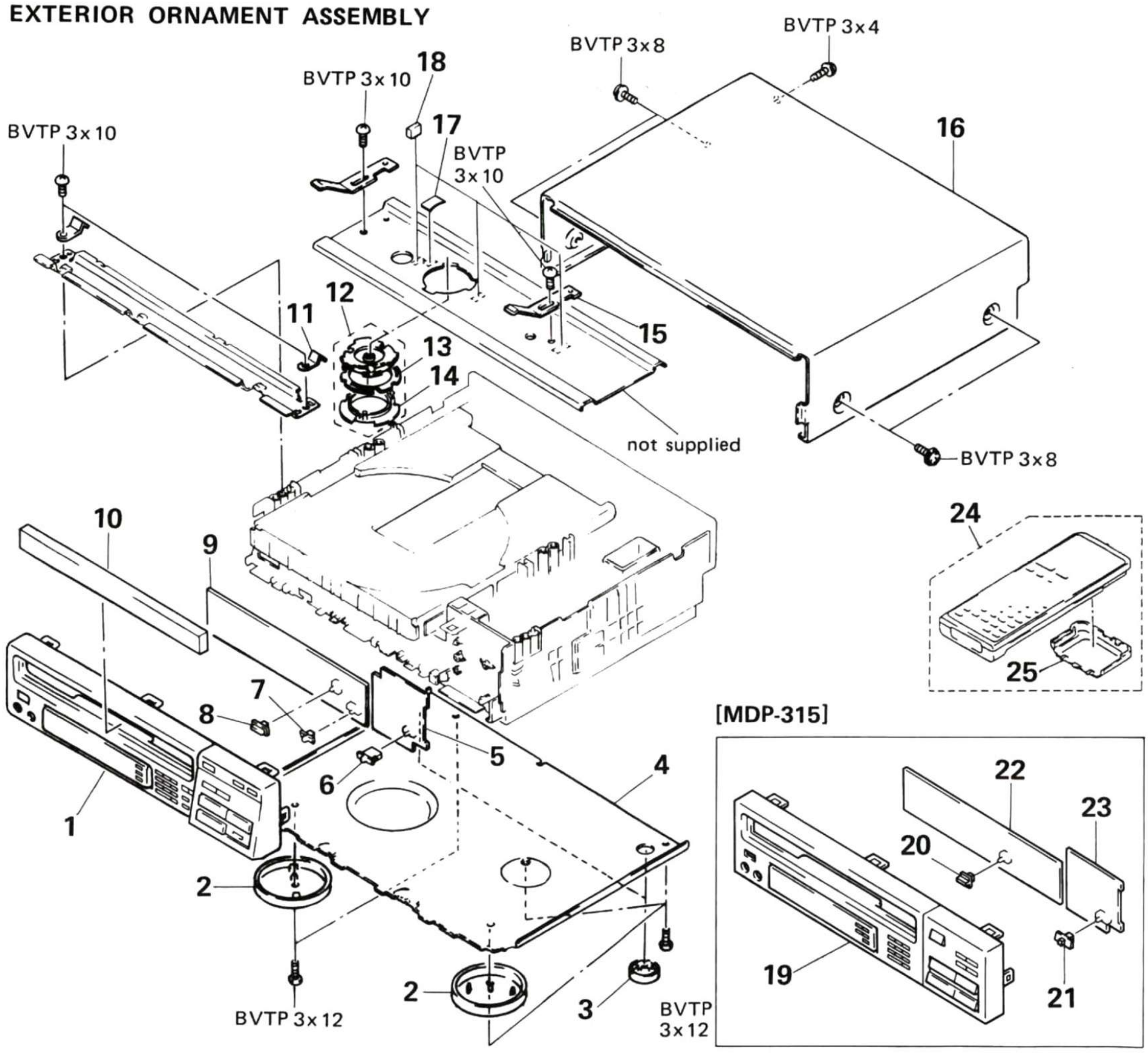

No.	Part No.	Description	Remark
1	X-3735-036-1	PANEL ASSY, FRONT (MDP-515D)	
2	X-3735-007-1	FOOT ASSY (L)	
3	X-3318-955-1	FOOT ASSY (S)	
4	*3-735-075-01	PLATE, BOTTOM	
5	*A-6421-375-A	FP-223 BOARD, COMPLETE (MDP-515D)	
6	3-737-464-01	CAP, M/ST (MDP-515D)	
7	3-737-418-01	KNOB, M.STOP (MDP-515D)	
8	3-737-425-01	KNOB, A/REPEAT (MDP-515D)	
9	*A-6421-374-A	FP-222 BOARD, COMPLETE (MDP-515D)	
10	3-737-467-01	COVER, TRAY	
11	3-735-090-01	SPRING	
12	X-3735-006-1	PLATE ASSY, PRESS	13, 14
13	3-735-011-01	SPRING	
14	3-735-010-01	PLATE (1), PRESS	
15	3-735-089-01	SPRING	
16	*3-735-065-01	CASE, UPPER	
17	*3-737-454-01	SHEET, HOLDER	
18	*9-911-842-XX	CUSHION	
19	X-3735-037-1	PANEL ASSY, FRONT (MDP-315)	
20	3-735-045-01	KNOB, A/REPEAT (MDP-315)	
21	3-735-004-01	KNOB, M.STOP (MDP-315)	
22	*A-6421-368-A	FP-197 BOARD, COMPLETE (MDP-315)	
23	*1-630-099-11	FP-198 BOARD (MDP-315)	
24	1-465-161-31	REMOTE COMMANDER (RMT-515D)	25
25	3-707-584-01	LID, BATTERY	

www.hifiengine.com

5-2. FRAME ASSEMBLY (1)

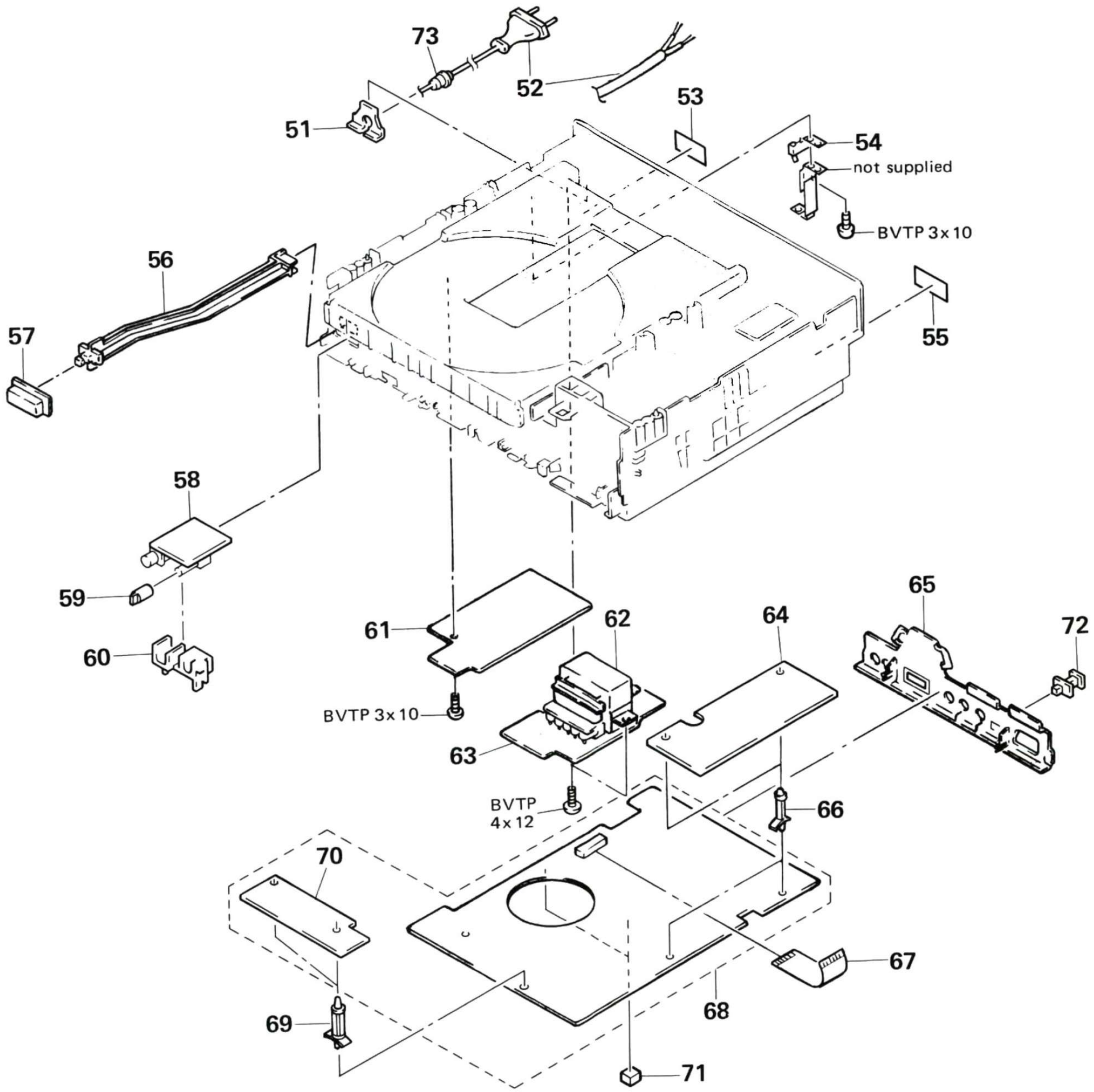

No.	Part No.	Description	Remark
51	*3-737-438-01	BRACKET, AC CORD	
52	⚠.1-551-908-61	CORD, POWER, EULO PLUG (AEP MODEL)	
	⚠.1-551-884-32	CORD, POWER (AUS MODEL)	
53	*3-737-462-11	LABEL, MODEL NUMBER (MDP-515D)(AEP MODEL)	
	*3-737-474-11	LABEL, MODEL NUMBER (MDP-315)	
	*3-737-486-01	LAVEL.MODEL NUMBER (AUS MODEL)	
54	3-735-091-01	SPRING	
55	*4-885-838-00	LABEL, CLASS 1	
56	3-735-050-01	LEVER, POWER SW	
57	3-735-051-01	BUTTON, POWER	
58	*1-630-090-11	HP-50 BOARD	
59	4-922-531-01	KNOB (A TYPE), LOV	
60	3-735-057-01	HOLDER, HP	
61	*A-6421-372-A	PS-193 BOARD, COMPLETE	

No.	Part No.	Description	Remark
62	⚠.1-449-849-11	TRANSFORMER, POWER (T401)	
63	*1-630-089-31	TR-30 BOARD	
64	*A-6421-370-A	RG-6 BOARD, COMPLETE (MDP-515D)	
65	X-3735-034-1	PLATE (P) ASSY, JACK	
66	*3-703-353-08	SUPPORTER, PC BOARD (MDP-515D)	
67	*1-574-755-11	WIRE, FLAT TYPE 28P	
68	*A-6421-369-A	MP-15 BOARD, COMPLETE	70
69	*3-703-353-08	SUPPORTER, PC BOARD	
70	*A-6421-371-A	AF-52 BOARD, COMPLETE	
71	9-911-843-XX	CUSHION	
72	8-759-977-71	COVER, OPTICAL JACK	
73	3-699-708-01	BUSHING, CORD (AUS MODEL)	

Note: The components identified by mark ⚠ or dotted line with mark ⚠ are critical for safety. Replace only with part number specified.

www.hifiengine.com

5-3. FRAME ASSEMBLY (2)

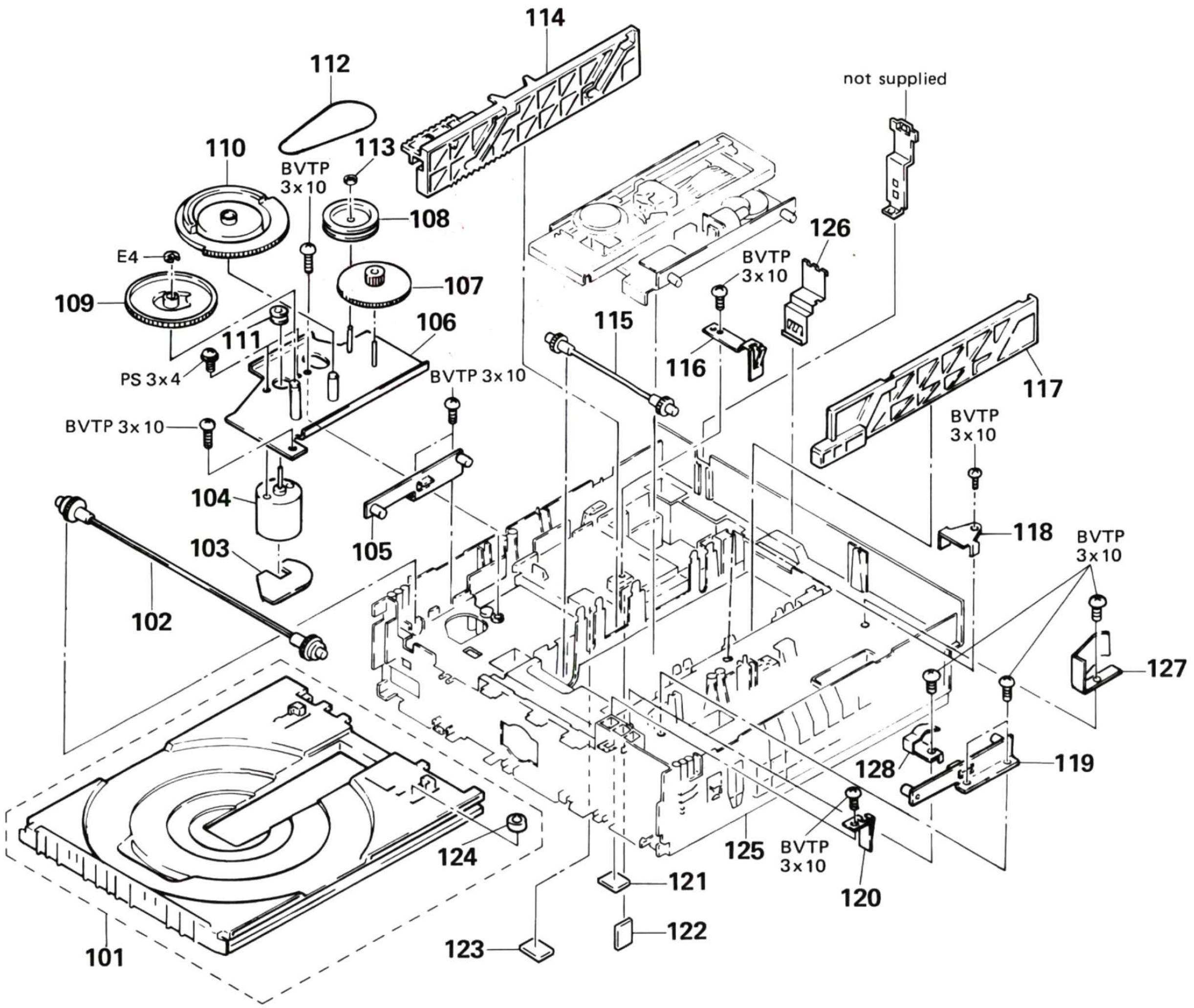

No.	Part No.	Description	Remark
101	X-3735-032-2	TRAY ASSY	124
102	X-3735-009-1	GEAR ASSY, PHASE	
103	*1-630-101-11	MT-29 BOARD	
104	1-541-309-11	MOTOR, DC (RF-370C) (LOADING) (M904)	
105	X-3735-021-1	GUIDE ASSY (LEFT), TRAY	
106	*X-3735-002-1	BASE ASSY, THREADING	
107	3-735-037-01	GEAR, MIDWAY	
108	3-735-036-01	PULLEY (A)	
109	3-735-035-01	GEAR, TRAY	
110	3-735-056-01	CAM, DRIVING	
111	3-713-318-01	PULLEY, MOTOR	
112	3-513-066-XX	BELT, FAST FORWARD	
113	3-669-595-00	WASHER (2), STOPPER	
114	3-735-053-01	RACK (LEFT)	

No.	Part No.	Description	Remark
115	X-3735-008-1	GEAR ASSY, MD PHASE	
116	3-737-401-01	SPRING (1)	
117	3-735-052-01	RACK (RIGHT)	
118	*3-737-415-01	RETAINER, RACK	
119	X-3735-022-1	GUIDE ASSY (RIGHT), TRAY	
120	3-737-402-01	SPRING (2)	
121	*1-630-092-11	SW-106 BOARD	
122	*1-630-093-11	SW-107 BOARD	
123	*1-630-091-11	LS-17 BOARD	
124	*4-914-248-01	STOPPER, RUBBER	
125	*3-735-071-51	FRAME	
126	*3-737-414-01	PLATE, GROUND, RF	
127	3-737-412-01	SPRING, LEAF	
128	3-737-448-01	SPRING, LEAF	

www.hifiengine.com

5-4. MD CHASSIS ASSEMBLY (1)

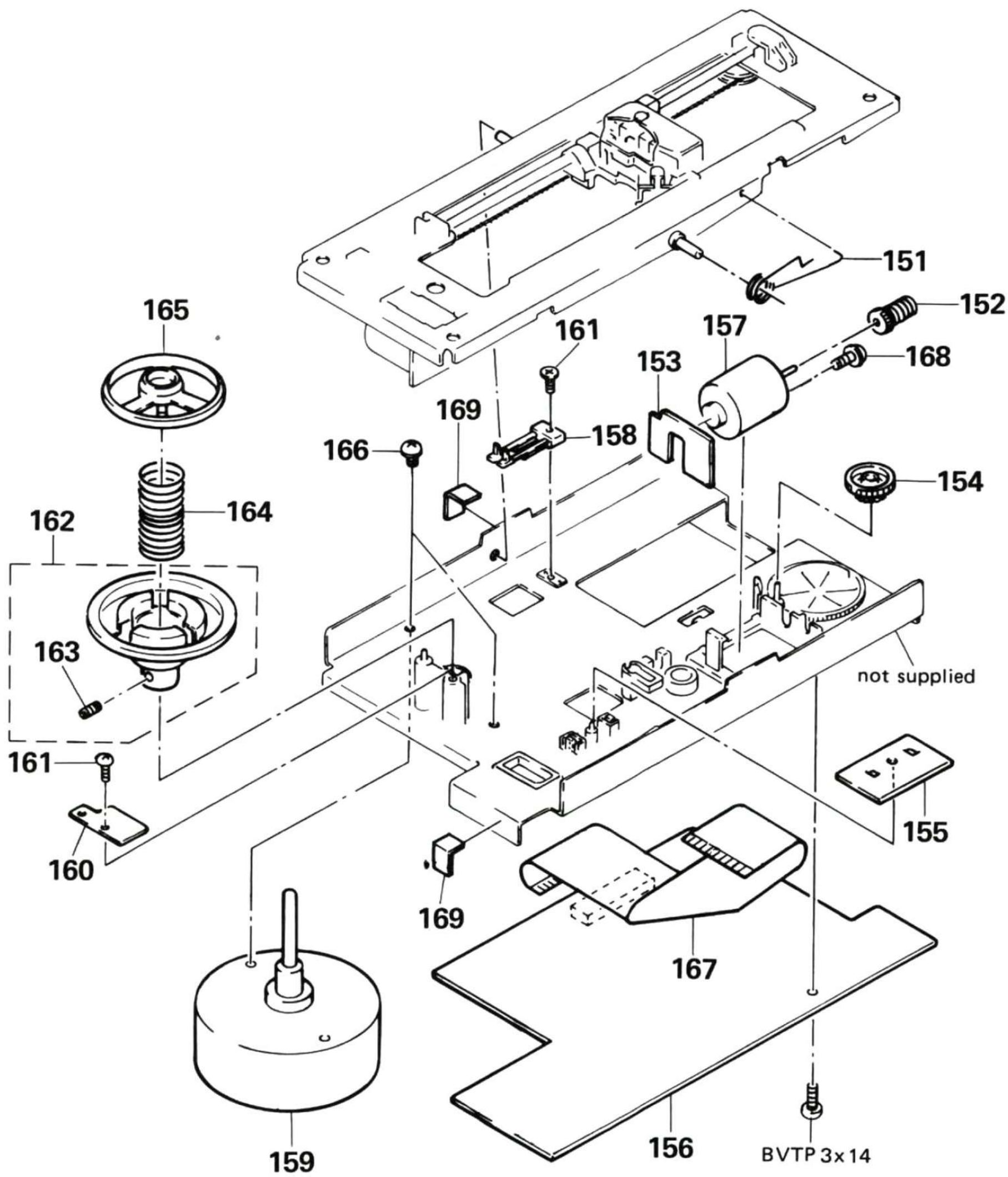

No.	Part No.	Description	Remark
151	3-735-021-01	SPRING, TORSION	
152	3-735-038-01	GEAR, WORM	
153	*1-631-095-11	MT-30 BOARD	
154	3-735-025-01	GEAR, SKEW	
155	*1-630-094-11	CK-14 BOARD	
156	*A-6421-311-A	SV-33 BOARD, COMPLETE	
157	1-541-659-11	MOTOR, DC (TILT) (M903)	
158	1-554-468-00	SWITCH, LEAF (SLED IN LIMIT LD/CD)(S903)	
159	1-541-665-11	MOTOR, SPINDLE (M901)	
160	*1-630-096-11	FG-13 BOARD	

No.	Part No.	Description	Remark
161	3-719-845-11	SCREW (B2X8), TAPPING	
162	X-3735-003-1	TURNTABLE ASSY	163
163	3-701-506-01	SET SCREW, DOUBLE POINT 3X4	
164	3-735-026-01	SPRING, COMPRESSION	
165	X-3735-004-1	GUIDE ASSY, CENTER	
166	4-606-833-01	SCREW (3X5), + PSW	
167	1-574-648-11	CABLE, FLEXIBLE FLAT (24 CORE)	
168	3-899-248-01	SCREW (M3X6)	
169	*3-737-413-01	SHEET, TEFLON	

www.hifiengine.com

5-5. MD CHASSIS ASSEMBLY (2)

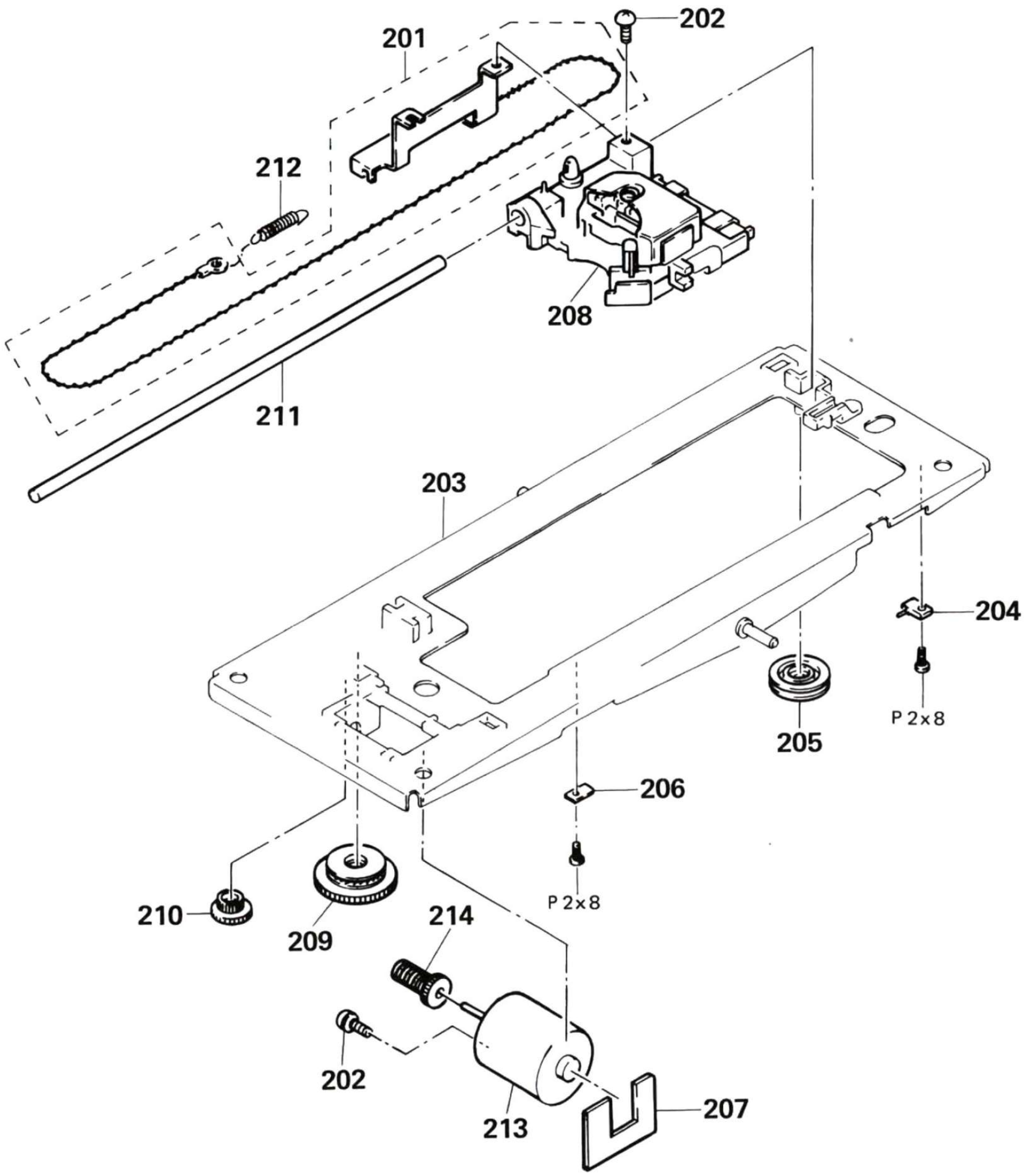

No.	Part No.	Description	Remark
201	X-3735-001-1	WIRE ASSY	
202	3-899-248-01	SCREW (M3X6)	
203	*X-3735-014-1	CHASSIS ASSY	
204	1-570-771-21	SWITCH (SLED OUT LIMIT) (S902)	
205	3-735-017-01	PULLEY, RETURN	
206	1-571-435-11	SWITCH (SLED IN LIMIT) (S901)	
207	*1-630-097-11	MT-28 BOARD	

No.	Part No.	Description	Remark
208	⚠.8-848-138-11	DEVICE, OPTICAL KHS-130A	
209	3-735-016-01	PULLEY, DRIVING	
210	3-735-015-01	GEAR, CARRIAGE	
211	*3-735-020-01	SHAFT, CARRIAGE	
212	3-672-430-00	SPRING, TENSION	
213	1-541-659-11	MOTOR, DC (SLED) (M902)	
214	3-735-038-01	GEAR, WORM	

Note: The components identified by mark ⚠ or dotted line with mark ⚠ are critical for safety. Replace only with part number specified.

www.hifiengine.com

SECTION 6
ELECTRICAL PARTS LIST

SV-33

NOTE:

- Due to standardization, replacements in the parts list may be different from the parts specified in the diagrams or the components used on the set.
- Items marked "★" are not stocked since they are seldom required for routine service. Some delay should be anticipated when ordering these items.
- If there are two or more same circuits in a set such as a stereophonic machine, only typical circuit parts may be indicated and capacitors and resistors in other same circuits may be omitted.

CAPACITORS:
MF: μF, PF: μμF.

RESISTORS
- All resistors are in ohms.
- F: nonflammable

COILS
- MMH: mH, UH: μH

SEMICONDUCTORS
In each case, U: μ, for example:
UA...: μA..., UPA...: μPA..., UPC...: μPC, UPD...: μPD...

The components identified by mark ⚠ or dotted line with mark ⚠ are critical for safety.
Replace only with part number specified.

Ref.No	Part No.	Description			Remark
	*A-6421-311-A	SV-33 BOARD, COMPLETE (Ref. No 7,000 Series) **********			
		CAPACITOR			
C101	1-163-109-00	CERAMIC CHIP 47PF	5%	50V	
C102	1-163-093-00	CERAMIC CHIP 10PF	5%	50V	
C103	1-124-584-00	ELECT 100MF	20%	10V	
C104	1-124-584-00	ELECT 100MF	20%	10V	
C106	1-126-160-11	ELECT 1MF	20%	50V	
C121	1-124-242-00	ELECT 33MF	20%	25V	
C122	1-124-242-00	ELECT 33MF	20%	25V	
C123	1-124-584-00	ELECT 100MF	20%	10V	
C124	1-124-584-00	ELECT 100MF	20%	10V	
C125	1-164-232-11	CERAMIC CHIP 0.01MF	10%	50V	
C126	1-164-232-11	CERAMIC CHIP 0.01MF	10%	50V	
C127	1-126-320-11	ELECT 10MF	20%	16V	
C128	1-136-153-00	FILM 0.01MF	5%	50V	
C129	1-136-173-00	FILM 0.47MF	5%	50V	
C130	1-126-320-11	ELECT 10MF	20%	16V	
C131	1-130-479-00	MYLAR 0.0047MF	5%	50V	
C132	1-130-487-00	MYLAR 0.022MF	5%	50V	
C133	1-130-476-00	MYLAR 0.0027MF	5%	50V	
C135	1-130-486-00	MYLAR 0.018MF	5%	50V	
C136	1-136-169-00	FILM 0.22MF	5%	50V	
C137	1-130-484-00	MYLAR 0.012MF	5%	50V	
C138	1-130-484-00	MYLAR 0.012MF	5%	50V	
C139	1-124-282-00	ELECT 22MF	20%	16V	
C140	1-126-320-11	ELECT 10MF	20%	16V	
C141	1-130-491-00	MYLAR 0.047MF	5%	50V	
C142	1-126-320-11	ELECT 10MF	20%	16V	
C143	1-136-165-00	FILM 0.1MF	5%	50V	
C144	1-130-478-00	MYLAR 0.0039MF	5%	50V	
C145	1-130-486-00	MYLAR 0.018MF	5%	50V	
C146	1-130-483-00	MYLAR 0.01MF	5%	50V	
C147	1-136-169-00	FILM 0.22MF	5%	50V	
C148	1-136-169-00	FILM 0.22MF	5%	50V	
C149	1-163-113-00	CERAMIC CHIP 68PF	5%	50V	
C150	1-163-093-00	CERAMIC CHIP 10PF	5%	50V	
C151	1-163-121-00	CERAMIC CHIP 150PF	5%	50V	
C152	1-163-093-00	CERAMIC CHIP 10PF	5%	50V	
C153	1-163-129-00	CERAMIC CHIP 330PF	5%	50V	
C154	1-163-115-00	CERAMIC CHIP 82PF	5%	50V	
C155	1-130-475-00	MYLAR 0.0022MF	5%	50V	
C157	1-126-160-11	ELECT 1MF	20%	50V	
C161	1-136-173-00	FILM 0.47MF	5%	50V	
C162	1-164-232-11	CERAMIC CHIP 0.01MF	10%	50V	
C163	1-164-232-11	CERAMIC CHIP 0.01MF	10%	50V	
C164	1-126-160-11	ELECT 1MF	20%	50V	
C165	1-163-019-00	CERAMIC CHIP 0.0068MF	10%	50V	
C166	1-124-443-00	ELECT 100MF	20%	10V	

Ref.No	Part No.	Description				Remark
		CONNECTOR				
CN101	1-566-939-11	CONNECTOR, F.P.C 24P				
CN102	1-563-493-11	CONNECTOR, F.P.C 28P				
CN103	1-506-485-11	PIN, CONNECTOR 6P				
CN104	1-506-482-11	PIN, CONNECTOR 3P				
CN104	*1-565-980-11	HOUSING, CONNECTOR(PC BOARD) 9P				
CN105	*1-566-969-11	HOUSING, CONNECTOR(PC BOARD)7P				
CN106	*1-566-968-11	HOUSING, CONNECTOR(PC BOARD)6P				
		DIODE				
D101	8-719-100-05	DIODE 1S2837				
D102	8-719-109-72	DIODE RD3.9ESB2				
D103	8-719-911-19	DIODE 1SS119				
		IC				
IC102	8-759-321-40	IC HA11529				
IC103	8-759-700-43	IC NJM4558M				
IC104	8-759-700-43	IC NJM4558M				
IC106	8-759-208-11	IC TC4053BFHB				
IC107	8-759-700-43	IC NJM4558M				
IC108	8-759-700-43	IC NJM4558M				
IC109⚠	8-749-920-86	IC STA-451C				
IC110⚠	8-749-920-86	IC STA-451C				
IC111	8-759-700-43	IC NJM4558M				
		JUMPER RESISTOR				
JR201	1-216-296-00	METAL GLAZE	0	5%	1/8W	
JR202	1-216-296-00	METAL GLAZE	0	5%	1/8W	
JR203	1-216-296-00	METAL GLAZE	0	5%	1/8W	
JR204	1-216-296-00	METAL GLAZE	0	5%	1/8W	
JR205	1-216-296-00	METAL GLAZE	0	5%	1/8W	
JR206	1-216-296-00	METAL GLAZE	0	5%	1/8W	
JR207	1-216-296-00	METAL GLAZE	0	5%	1/8W	
JR208	1-216-296-00	METAL GLAZE	0	5%	1/8W	
JR209	1-216-296-00	METAL GLAZE	0	5%	1/8W	
JR210	1-216-296-00	METAL GLAZE	0	5%	1/8W	
JR211	1-216-296-00	METAL GLAZE	0	5%	1/8W	
JR212	1-216-296-00	METAL GLAZE	0	5%	1/8W	
JR214	1-216-296-00	METAL GLAZE	0	5%	1/8W	
JR215	1-216-296-00	METAL GLAZE	0	5%	1/8W	
JR216	1-216-296-00	METAL GLAZE	0	5%	1/8W	
JR217	1-216-296-00	METAL GLAZE	0	5%	1/8W	
		COIL				
L101	1-408-409-00	INDUCTOR	10UH			
L102	1-410-328-11	INDUCTOR	10UH			
L103	1-410-509-11	INDUCTOR	10UH			
		TRANSISTOR				
Q101	8-729-901-05	TRANSISTOR DTA124EK				
Q102	8-729-901-00	TRANSISTOR DTC124EK				
Q103	8-729-901-00	TRANSISTOR DTC124EK				

When indicating parts by reference number, please include the board name.

www.hifiengine.com

Ref.No	Part No.	Description				Remark
Q104	8-729-100-66	TRANSISTOR 2SC1623				
Q105	8-729-100-66	TRANSISTOR 2SC1623				
Q106	8-729-100-66	TRANSISTOR 2SC1623				
Q107	8-729-900-89	TRANSISTOR DTC124ES				
		RESISTOR				
R101	1-216-073-00	METAL GLAZE	10K	5%	1/10W	
R102	1-216-073-00	METAL GLAZE	10K	5%	1/10W	
R103	1-216-073-00	METAL GLAZE	10K	5%	1/10W	
R104	1-216-073-00	METAL GLAZE	10K	5%	1/10W	
R105	1-216-085-00	METAL GLAZE	33K	5%	1/10W	
R106	1-216-073-00	METAL GLAZE	10K	5%	1/10W	
R107	1-216-073-00	METAL GLAZE	10K	5%	1/10W	
R108	1-216-073-00	METAL GLAZE	10K	5%	1/10W	
R109	1-216-073-00	METAL GLAZE	10K	5%	1/10W	
R110	1-216-049-00	METAL GLAZE	1K	5%	1/10W	
R111	1-216-073-00	METAL GLAZE	10K	5%	1/10W	
R112	1-216-073-00	METAL GLAZE	10K	5%	1/10W	
R113	1-216-073-00	METAL GLAZE	10K	5%	1/10W	
R114	1-216-089-00	METAL GLAZE	47K	5%	1/10W	
R115	1-216-061-00	METAL GLAZE	3.3K	5%	1/10W	
R116	1-216-079-00	METAL GLAZE	18K	5%	1/10W	
R117	1-216-061-00	METAL GLAZE	3.3K	5%	1/10W	
R118	1-216-061-00	METAL GLAZE	3.3K	5%	1/10W	
R119	1-216-061-00	METAL GLAZE	3.3K	5%	1/10W	
R120	1-216-073-00	METAL GLAZE	10K	5%	1/10W	
R121	1-216-077-00	METAL GLAZE	15K	5%	1/10W	
R122	1-216-870-11	METAL GLAZE	180K	1%	1/10W	
R123	1-216-025-00	METAL GLAZE	100	5%	1/10W	
R124	1-216-025-00	METAL GLAZE	100	5%	1/10W	
R125	1-216-081-00	METAL GLAZE	22K	5%	1/10W	
R126	1-216-065-00	METAL GLAZE	4.7K	5%	1/10W	
R127	1-216-061-00	METAL GLAZE	3.3K	5%	1/10W	
R128	1-216-061-00	METAL GLAZE	3.3K	5%	1/10W	
R129	1-216-039-00	METAL GLAZE	390	5%	1/10W	
R130	1-216-024-00	METAL GLAZE	91	5%	1/10W	
R145	1-216-073-00	METAL GLAZE	10K	5%	1/10W	
R146	1-216-065-00	METAL GLAZE	4.7K	5%	1/10W	
R147	1-216-073-00	METAL GLAZE	10K	5%	1/10W	
R148	1-216-073-00	METAL GLAZE	10K	5%	1/10W	
R149	1-216-065-00	METAL GLAZE	4.7K	5%	1/10W	
R150	1-216-085-00	METAL GLAZE	33K	5%	1/10W	
R151	1-216-113-00	METAL GLAZE	470K	5%	1/10W	
R152	1-216-057-00	METAL GLAZE	2.2K	5%	1/10W	
R153	1-216-113-00	METAL GLAZE	470K	5%	1/10W	
R155	1-216-089-00	METAL GLAZE	47K	5%	1/10W	
R156	1-216-083-00	METAL GLAZE	27K	5%	1/10W	
R157	1-216-101-00	METAL GLAZE	150K	5%	1/10W	
R158	1-216-057-00	METAL GLAZE	2.2K	5%	1/10W	
R159	1-216-075-00	METAL GLAZE	12K	5%	1/10W	
R160	1-216-083-00	METAL GLAZE	27K	5%	1/10W	
R161	1-216-101-00	METAL GLAZE	150K	5%	1/10W	
R162	1-216-051-00	METAL GLAZE	1.2K	5%	1/10W	

Ref.No	Part No.	Description				Remark
R163	1-216-083-00	METAL GLAZE	27K	5%	1/10W	
R164	1-216-035-00	METAL GLAZE	270	5%	1/10W	
R165	1-216-089-00	METAL GLAZE	47K	5%	1/10W	
R166	1-216-041-00	METAL GLAZE	470	5%	1/10W	
R167	1-216-049-00	METAL GLAZE	1K	5%	1/10W	
R168	1-216-049-00	METAL GLAZE	1K	5%	1/10W	
R169	1-216-049-00	METAL GLAZE	1K	5%	1/10W	
R170	1-216-049-00	METAL GLAZE	1K	5%	1/10W	
R171	1-216-049-00	METAL GLAZE	1K	5%	1/10W	
R172	1-216-049-00	METAL GLAZE	1K	5%	1/10W	
R173	1-216-081-00	METAL GLAZE	22K	5%	1/10W	
R174	1-216-073-00	METAL GLAZE	10K	5%	1/10W	
R175	1-216-085-00	METAL GLAZE	33K	5%	1/10W	
R176	1-216-748-11	METAL GLAZE	39K	5%	1/10W	
R177	1-216-091-00	METAL GLAZE	56K	5%	1/10W	
R178	1-216-748-11	METAL GLAZE	39K	5%	1/10W	
R179	1-216-101-00	METAL GLAZE	150K	5%	1/10W	
R180	1-216-061-00	METAL GLAZE	3.3K	5%	1/10W	
R181	1-216-083-00	METAL GLAZE	27K	5%	1/10W	
R182	1-216-067-00	METAL GLAZE	5.6K	5%	1/10W	
R183	1-216-067-00	METAL GLAZE	5.6K	5%	1/10W	
R184	1-216-089-00	METAL GLAZE	47K	5%	1/10W	
R185	1-216-097-00	METAL GLAZE	100K	5%	1/10W	
R186	1-216-069-00	METAL GLAZE	6.8K	5%	1/10W	
R187	1-216-097-00	METAL GLAZE	100K	5%	1/10W	
R188	1-216-069-00	METAL GLAZE	6.8K	5%	1/10W	
R189	1-216-085-00	METAL GLAZE	33K	5%	1/10W	
R190	1-216-085-00	METAL GLAZE	33K	5%	1/10W	
R191	1-216-097-00	METAL GLAZE	100K	5%	1/10W	
R192	1-216-081-00	METAL GLAZE	22K	5%	1/10W	
R193	1-216-105-00	METAL GLAZE	220K	5%	1/10W	
R194	1-216-079-00	METAL GLAZE	18K	5%	1/10W	
R195	1-216-081-00	METAL GLAZE	22K	5%	1/10W	
R196	1-216-017-00	METAL GLAZE	47	5%	1/10W	
R197	1-216-097-00	METAL GLAZE	100K	5%	1/10W	
R198	1-216-081-00	METAL GLAZE	22K	5%	1/10W	
R199	1-216-017-00	METAL GLAZE	47	5%	1/10W	
R200	1-216-073-00	METAL GLAZE	10K	5%	1/10W	
R201	1-216-095-00	METAL GLAZE	82K	5%	1/10W	
R202	1-216-081-00	METAL GLAZE	22K	5%	1/10W	
R203	1-216-017-00	METAL GLAZE	47	5%	1/10W	
R206	1-216-051-00	METAL GLAZE	1.2K	5%	1/10W	
R207	1-216-051-00	METAL GLAZE	1.2K	5%	1/10W	
R208	1-216-051-00	METAL GLAZE	1.2K	5%	1/10W	
R209	1-216-081-00	METAL GLAZE	22K	5%	1/10W	
R210	1-216-081-00	METAL GLAZE	22K	5%	1/10W	
R211	1-216-017-00	METAL GLAZE	47	5%	1/10W	
R212 ⚠	1-216-373-11	METAL OXIDE	2.2	5%	2W	F
R213 ⚠	1-216-373-11	METAL OXIDE	2.2	5%	2W	F
R214	1-216-065-00	METAL GLAZE	4.7K	5%	1/10W	
R215	1-216-083-00	METAL GLAZE	27K	5%	1/10W	
R217	1-216-065-00	METAL GLAZE	4.7K	5%	1/10W	
R218	1-216-097-00	METAL GLAZE	100K	5%	1/10W	

When indicating parts by reference number, please include the board name.

www.hifiengine.com

Ref.No	Part No.	Description				Remark
R220	1-216-081-00	METAL GLAZE	22K	5%	1/10W	
R221	1-216-079-00	METAL GLAZE	18K	5%	1/10W	
R222	1-216-081-00	METAL GLAZE	22K	5%	1/10W	
R223	1-216-033-00	METAL GLAZE	220	5%	1/10W	
R224	1-216-057-00	METAL GLAZE	2.2K	5%	1/10W	
R225	1-216-061-00	METAL GLAZE	3.3K	5%	1/10W	
R226	1-216-037-00	METAL GLAZE	330	5%	1/10W	
R227	1-216-017-00	METAL GLAZE	47	5%	1/10W	
R228	1-216-073-00	METAL GLAZE	10K	5%	1/10W	
R229	1-216-081-00	METAL GLAZE	22K	5%	1/10W	
R230	1-216-055-00	METAL GLAZE	1.8K	5%	1/10W	
R231	1-216-055-00	METAL GLAZE	1.8K	5%	1/10W	
R233	1-216-101-00	METAL GLAZE	150K	5%	1/10W	
R234	1-216-073-00	METAL GLAZE	10K	5%	1/10W	
R235	1-216-065-00	METAL GLAZE	4.7K	5%	1/10W	
R236	1-216-081-00	METAL GLAZE	22K	5%	1/10W	
R237	1-216-033-00	METAL GLAZE	220	5%	1/10W	
R238	1-216-037-00	METAL GLAZE	330	5%	1/10W	
R239	1-216-077-00	METAL GLAZE	15K	5%	1/10W	
R240	1-216-065-00	METAL GLAZE	4.7K	5%	1/10W	

JUMPER RESISTOR

RJ101	1-216-295-00	METAL GLAZE	0	5%	1/10W
RJ102	1-216-295-00	METAL GLAZE	0	5%	1/10W
RJ103	1-216-295-00	METAL GLAZE	0	5%	1/10W
RJ104	1-216-295-00	METAL GLAZE	0	5%	1/10W
RJ105	1-216-295-00	METAL GLAZE	0	5%	1/10W
RJ106	1-216-295-00	METAL GLAZE	0	5%	1/10W
RJ107	1-216-295-00	METAL GLAZE	0	5%	1/10W
RJ108	1-216-295-00	METAL GLAZE	0	5%	1/10W
RJ109	1-216-295-00	METAL GLAZE	0	5%	1/10W
RJ110	1-216-295-00	METAL GLAZE	0	5%	1/10W
RJ111	1-216-295-00	METAL GLAZE	0	5%	1/10W
RJ218	1-216-295-00	METAL GLAZE	0	5%	1/10W
RJ219	1-216-295-00	METAL GLAZE	0	5%	1/10W
RJ220	1-216-295-00	METAL GLAZE	0	5%	1/10W
RJ241	1-216-295-00	METAL GLAZE	0	5%	1/10W

VARIABLE RESISTOR

RV101	1-228-993-00	RES, ADJ, CARBON 4.7K
RV102	1-228-994-00	RES, ADJ, CARBON 10K
RV103	1-228-994-00	RES, ADJ, CARBON 10K
RV104	1-228-994-00	RES, ADJ, CARBON 10K
RV105	1-228-994-00	RES, ADJ, CARBON 10K
RV106	1-228-990-00	RES, ADJ, CARBON 1K
RV107	1-228-994-00	RES, ADJ, CARBON 10K
RV108	1-228-990-00	RES, ADJ, CARBON 1K

****

Ref.No	Part No.	Description				Remark
	*A-6421-369-A	MP-15 BOARD, COMPLETE *(Ref. No 1,000 Series) ********** (Including the AF-52 and TL-40 BOARDS)				
	*3-309-144-21	HEAT SINK				
	3-737-480-01	PLATE, GROUND, JACK				
	7-685-646-79	SCREW +BVTP 3X8 TYPE 2 IT-3				

CAPACITOR

C101	1-124-360-00	ELECT	1000MF	20%	16V	
C102	1-124-472-11	ELECT	470MF	20%	10V	
C103	1-163-115-00	CERAMIC CHIP	82PF	5%	50V	
C104	1-124-438-00	ELECT	1MF	20%	50V	
C105	1-163-117-00	CERAMIC CHIP	100PF	5%	50V	
C106	1-163-097-00	CERAMIC CHIP	15PF	5%	50V	
C107	1-124-589-11	ELECT	47MF	20%	16V	
C108	1-164-232-11	CERAMIC CHIP	0.01MF	10%	50V	
C109	1-124-446-11	ELECT	47MF	20%	10V	
C110	1-163-103-00	CERAMIC CHIP	27PF	5%	50V	
C111	1-163-095-00	CERAMIC CHIP	12PF	5%	50V	
C112	1-163-105-00	CERAMIC CHIP	33PF	5%	50V	
C113	1-163-115-00	CERAMIC CHIP	82PF	5%	50V	
C114	1-163-101-00	CERAMIC CHIP	22PF	5%	50V	
C115	1-163-113-00	CERAMIC CHIP	68PF	5%	50V	
C116	1-163-103-00	CERAMIC CHIP	27PF	5%	50V	
C117	1-163-113-00	CERAMIC CHIP	68PF	5%	50V	
C118	1-163-097-00	CERAMIC CHIP	15PF	5%	50V	
C119	1-163-103-00	CERAMIC CHIP	27PF	5%	50V	
C120	1-126-157-11	ELECT	10MF	20%	16V	
C121	1-126-157-11	ELECT	10MF	20%	16V	
C122	1-126-157-11	ELECT	10MF	20%	16V	
C123	1-136-165-00	MYLAR	0.1MF	10%	50V	
C124	1-163-038-00	CERAMIC CHIP	0.1MF		25V	
C125	1-163-019-00	CERAMIC CHIP	0.0068MF	10%	50V	
C126	1-124-589-11	ELECT	47MF	20%	16V	
C127	1-163-035-00	CERAMIC CHIP	0.047MF		50V	
C128	1-124-446-11	ELECT	47MF	20%	10V	
C129	1-163-035-00	CERAMIC CHIP	0.047MF		50V	
C130	1-163-095-00	CERAMIC CHIP	12PF	5%	50V	
C131	1-163-107-00	CERAMIC CHIP	39PF	5%	50V	
C132	1-163-095-00	CERAMIC CHIP	12PF	5%	50V	
C133	1-124-438-00	ELECT	1MF	20%	50V	
C134	1-124-438-00	ELECT	1MF	20%	50V	
C135	1-124-442-00	ELECT	330MF	20%	6.3V	
C136	1-163-038-00	CERAMIC CHIP	0.1MF		25V	
C137	1-163-129-00	CERAMIC CHIP	330PF	5%	50V	
C138	1-164-161-11	CERAMIC CHIP	0.0022MF	10%	50V	
C139	1-163-035-00	CERAMIC CHIP	0.047MF		50V	
C140	1-163-125-00	CERAMIC CHIP	220PF	5%	50V	
C141	1-163-109-00	CERAMIC CHIP	47PF	5%	50V	
C142	1-124-438-00	ELECT	1MF	20%	50V	
C143	1-124-438-00	ELECT	1MF	20%	50V	(MDP-515D)
C144	1-163-123-00	CERAMIC CHIP	180PF	5%	50V	(MDP-515D)
C145	1-124-438-00	ELECT	1MF	20%	50V	(MDP-515D)

When indicating parts by reference number, please include the board name.

* Be sure to always read "precautions for replacement of MP-15 complate board" in page 99.
When replaycing the MP-15 complete board.

www.hifiengine.com

MP-15

Ref.No	Part No.	Description			Remark
C146	1-163-123-00	CERAMIC CHIP 180PF	5%	50V	
C147	1-124-443-00	ELECT 100MF	20%	10V	
C148	1-163-131-00	CERAMIC CHIP 390PF	5%	50V	
C149	1-163-103-00	CERAMIC CHIP 27PF	5%	50V	(MDP-515D)
C150	1-163-105-00	CERAMIC CHIP 33PF	5%	50V	
C150	1-163-107-00	CERAMIC CHIP 39PF	5%	50V	(MDP-315)
C151	1-164-232-11	CERAMIC CHIP 0.01MF		50V	
C152	1-163-035-00	CERAMIC CHIP 0.047MF		50V	
C153	1-124-257-00	ELECT 2.2MF	20%	50V	
C154	1-124-446-11	ELECT 47MF	20%	10V	
C156	1-124-443-00	ELECT 100MF	20%	10V	
C157	1-124-257-00	ELECT 2.2MF	20%	50V	
C158	1-124-471-00	ELECT 1000MF	20%	6.3V	
C159	1-163-035-00	CERAMIC CHIP 0.047MF		50V	
C160	1-136-153-00	MYLAR 0.01MF	10%	50V	
C161	1-131-347-00	TANTALUM 1MF	10%	35V	
C162	1-136-157-00	MYLAR 0.022MF	10%	50V	
C163	1-163-107-00	CERAMIC CHIP 39PF	5%	50V	
C164	1-163-099-00	CERAMIC CHIP 18PF	5%	50V	
C165	1-163-101-00	CERAMIC CHIP 22PF	5%	50V	
C166	1-124-442-00	ELECT 330MF	20%	6.3V	
C167	1-163-035-00	CERAMIC CHIP 0.047MF		50V	
C168	1-124-438-00	ELECT 1MF	20%	50V	
C169	1-163-035-00	CERAMIC CHIP 0.047MF		50V	
C170	1-163-035-00	CERAMIC CHIP 0.047MF		50V	
C171	1-124-442-00	ELECT 330MF	20%	6.3V	
C174	1-164-232-11	CERAMIC CHIP 0.01MF		50V	
C175	1-163-101-00	CERAMIC CHIP 22PF	5%	50V	
C176	1-164-232-11	CERAMIC CHIP 0.01MF		50V	
C177	1-163-109-00	CERAMIC CHIP 47PF	5%	50V	
C178	1-163-109-00	CERAMIC CHIP 47PF	5%	50V	
C179	1-164-232-11	CERAMIC CHIP 0.01MF		50V	
C180	1-164-232-11	CERAMIC CHIP 0.01MF		50V	
C181	1-164-232-11	CERAMIC CHIP 0.01MF		50V	
C182	1-163-035-00	CERAMIC CHIP 0.047MF		50V	
C183	1-124-446-11	ELECT 47MF	20%	10V	
C184	1-164-232-11	CERAMIC CHIP 0.01MF		50V	
C185	1-163-121-00	CERAMIC CHIP 150PF	5%	50V	
C186	1-163-035-00	CERAMIC CHIP 0.047MF		50V	
C187	1-163-088-00	CERAMIC CHIP 5PF	0.25PF	50V	(MDP-515D)
C188	1-163-095-00	CERAMIC CHIP 12PF	5%	50V	(MDP-515D)
C188	1-163-099-00	CERAMIC CHIP 18PF	5%	50V	(MDP-315)
C189	1-163-035-00	CERAMIC CHIP 0.047MF		50V	
C190	1-124-446-11	ELECT 47MF	20%	10V	
C191	1-163-038-00	CERAMIC CHIP 0.1MF		25V	(MDP-515D)
C192	1-163-038-00	CERAMIC CHIP 0.1MF		25V	(MDP-515D)
C193	1-164-232-11	CERAMIC CHIP 0.01MF		50V	
C195	1-164-232-11	CERAMIC CHIP 0.01MF		50V	
C196	1-164-232-11	CERAMIC CHIP 0.01MF		50V	
C197	1-164-232-11	CERAMIC CHIP 0.01MF		50V	
C198	1-163-125-00	CERAMIC CHIP 220PF	5%	50V	
C199	1-163-125-00	CERAMIC CHIP 220PF	5%	50V	
C200	1-163-035-00	CERAMIC CHIP 0.047MF		50V	

Ref.No	Part No.	Description			Remark
C201	1-136-153-00	MYLAR 0.01MF	10%	50V	
C202	1-130-474-00	MYLAR 0.0018MF	5%	50V	
C203	1-164-232-11	CERAMIC CHIP 0.01MF		50V	
C204	1-136-153-00	MYLAR 0.01MF	10%	50V	
C205	1-136-159-00	MYLAR 0.033MF	10%	50V	
C206	1-163-117-00	CERAMIC CHIP 100PF	5%	50V	
C207	1-163-105-00	CERAMIC CHIP 33PF	5%	50V	
C208	1-164-232-11	CERAMIC CHIP 0.01MF	10%	50V	
C209	1-163-015-00	CERAMIC CHIP 0.0033MF	10%	50V	
C210	1-163-035-00	CERAMIC CHIP 0.047MF		50V	
C211	1-124-589-11	ELECT 47MF	20%	16V	
C212	1-163-022-00	CERAMIC CHIP 0.012MF	10%	50V	
C213	1-163-139-00	CERAMIC CHIP 820PF	5%	50V	
C214	1-124-446-11	ELECT 47MF	20%	10V	
C215	1-163-035-00	CERAMIC CHIP 0.047MF		50V	
C216	1-163-119-00	CERAMIC CHIP 120PF	5%	50V	
C217	1-163-119-00	CERAMIC CHIP 120PF	5%	50V	
C218	1-124-438-00	ELECT 1MF	20%	50V	
C219	1-163-101-00	CERAMIC CHIP 22PF	5%	50V	
C220	1-164-232-11	CERAMIC CHIP 0.01MF		50V	
C222	1-163-035-00	CERAMIC CHIP 0.047MF		50V	
C223	1-163-119-00	CERAMIC CHIP 120PF	5%	50V	
C224	1-124-446-11	ELECT 47MF	20%	10V	
C225	1-163-035-00	CERAMIC CHIP 0.047MF		50V	
C226	1-124-446-11	ELECT 47MF	20%	10V	
C229	1-136-159-00	MYLAR 0.033MF	10%	50V	
C230	1-136-161-00	MYLAR 0.047MF	10%	50V	
C231	1-131-345-00	TANTALUM 0.47MF	10%	35V	
C232	1-124-438-00	ELECT 1MF	20%	50V	
C233	1-164-232-11	CERAMIC CHIP 0.01MF		50V	
C234	1-163-117-00	CERAMIC CHIP 100PF	5%	50V	
C235	1-130-489-00	MYLAR 0.033MF	5%	50V	
C236	1-130-486-00	MYLAR 0.018MF	5%	50V	
C237	1-163-117-00	CERAMIC CHIP 100PF	5%	50V	
C238	1-163-117-00	CERAMIC CHIP 100PF	5%	50V	
C239	1-130-483-00	MYLAR 0.01MF	5%	50V	
C240	1-124-446-11	ELECT 47MF	20%	10V	
C241	1-163-035-00	CERAMIC CHIP 0.047MF		50V	
C242	1-163-015-00	CERAMIC CHIP 0.0033MF	10%	50V	
C243	1-136-153-00	MYLAR 0.01MF	10%	50V	
C244	1-164-232-11	CERAMIC CHIP 0.01MF		50V	
C245	1-163-035-00	CERAMIC CHIP 0.047MF		50V	
C246	1-163-035-00	CERAMIC CHIP 0.047MF		50V	
C247	1-124-446-11	ELECT 47MF	20%	10V	
C248	1-124-438-00	ELECT 1MF	20%	50V	
C249	1-136-161-00	MYLAR 0.047MF	10%	50V	
C250	1-124-257-00	ELECT 2.2MF	20%	50V	
C251	1-124-446-11	ELECT 47MF	20%	10V	
C252	1-124-443-00	ELECT 100MF	20%	10V	
C253	1-163-125-00	CERAMIC CHIP 220PF	5%	50V	
C254	1-163-035-00	CERAMIC CHIP 0.047MF		50V	
C255	1-124-446-11	ELECT 47MF	20%	10V	
C256	1-163-117-00	CERAMIC CHIP 100PF	5%	50V	(MDP-515D)

When indicating parts by reference number, please include the board name.

www.hifiengine.com

Ref.No	Part No.	Description			Remark
C257	1-124-443-00	ELECT	100MF	20%	10V
C258	1-163-035-00	CERAMIC CHIP	0.047MF		50V
C261	1-164-232-11	CERAMIC CHIP	0.01MF		50V
C262	1-124-446-11	ELECT	47MF	20%	10V
C270	1-124-446-11	ELECT	47MF	20%	10V
C271	1-163-035-00	CERAMIC CHIP	0.047MF		50V
C272	1-163-105-00	CERAMIC CHIP	33PF	5%	50V
C273	1-163-035-00	CERAMIC CHIP	0.047MF		50V
C274	1-163-035-00	CERAMIC CHIP	0.047MF		50V
C275	1-163-038-00	CERAMIC CHIP	0.1MF		25V
C276	1-124-589-11	ELECT	47MF	20%	16V
C277	1-163-093-00	CERAMIC CHIP	10PF	5%	50V
C279	1-124-442-00	ELECT	330MF	20%	6.3V
C280	1-124-442-00	ELECT	330MF	20%	6.3V
C281	1-163-103-00	CERAMIC CHIP	27PF	5%	50V
C282	1-164-232-11	CERAMIC CHIP	0.01MF		50V
C283	1-163-103-00	CERAMIC CHIP	27PF	5%	50V
C284	1-163-103-00	CERAMIC CHIP	27PF	5%	50V
C285	1-163-103-00	CERAMIC CHIP	27PF	5%	50V
C286	1-164-232-11	CERAMIC CHIP	0.01MF		50V
C287	1-126-157-11	ELECT	10MF	20%	16V
C288	1-163-101-00	CERAMIC CHIP	22PF	5%	50V
C289	1-163-113-00	CERAMIC CHIP	68PF	5%	50V
C290	1-163-113-00	CERAMIC CHIP	68PF	5%	50V
C291	1-163-101-00	CERAMIC CHIP	22PF	5%	50V
C292	1-163-113-00	CERAMIC CHIP	68PF	5%	50V
C293	1-163-101-00	CERAMIC CHIP	22PF	5%	50V
C294	1-164-232-11	CERAMIC CHIP	0.01MF		50V (MDP-515D)
C295	1-164-232-11	CERAMIC CHIP	0.01MF		50V (MDP-515D)
C297	1-163-035-00	CERAMIC CHIP	0.047MF		50V
C298	1-164-232-11	CERAMIC CHIP	0.01MF		50V
C299	1-126-157-11	ELECT	10MF	20%	16V
C300	1-126-157-11	ELECT	10MF	20%	16V
C301	1-163-131-00	CERAMIC CHIP	390PF	5%	50V
C302	1-163-109-00	CERAMIC CHIP	47PF	5%	50V
C303	1-163-103-00	CERAMIC CHIP	27PF	5%	50V
C601	1-163-125-00	CERAMIC CHIP	220PF	5%	50V (MDP-515D)
C602	1-124-257-00	ELECT	2.2MF	20%	50V
C603	1-163-117-00	CERAMIC CHIP	100PF	5%	50V
C604	1-163-103-00	CERAMIC CHIP	27PF	5%	50V
C605	1-163-103-00	CERAMIC CHIP	27PF	5%	50V
C606	1-163-111-00	CERAMIC CHIP	56PF	5%	50V
C607	1-163-117-00	CERAMIC CHIP	100PF	5%	50V
C608	1-163-035-00	CERAMIC CHIP	0.047MF		50V
C609	1-124-589-11	ELECT	47MF	20%	16V
C610	1-163-035-00	CERAMIC CHIP	0.047MF		50V
C611	1-124-589-11	ELECT	47MF	20%	16V
C612	1-163-035-00	CERAMIC CHIP	0.047MF		50V
C613	1-163-009-11	CERAMIC CHIP	0.001MF	10%	50V
C614	1-163-125-00	CERAMIC CHIP	220PF	5%	50V
C615	1-126-094-11	ELECT	4.7MF	20%	25V
C616	1-163-103-00	CERAMIC CHIP	27PF	5%	50V
C617	1-163-093-00	CERAMIC CHIP	10PF	5%	50V

Ref.No	Part No.	Description			Remark
C618	1-163-133-00	CERAMIC CHIP	470PF	5%	50V
C619	1-163-105-00	CERAMIC CHIP	33PF	5%	50V
C620	1-163-111-00	CERAMIC CHIP	56PF	5%	50V
C621	1-164-232-11	CERAMIC CHIP	0.01MF		50V
C622	1-126-157-11	ELECT	10MF	20%	16V
C623	1-163-037-11	CERAMIC CHIP	0.022MF	10%	25V
C624	1-163-101-00	CERAMIC CHIP	22PF	5%	50V
C625	1-124-589-11	ELECT	47MF	20%	16V
C626	1-126-177-11	ELECT	100MF	20%	6.3V
C627	1-163-019-00	CERAMIC CHIP	0.0068MF	10%	50V
C628	1-124-438-00	ELECT	1MF	20%	50V
C629	1-126-177-11	ELECT	100MF	20%	6.3V
C630	1-163-121-00	CERAMIC CHIP	150PF	5%	50V
C631	1-163-017-00	CERAMIC CHIP	0.0047MF	10%	50V
C632	1-126-177-11	ELECT	100MF	20%	6.3V
C633	1-163-009-11	CERAMIC CHIP	0.001MF	10%	50V
C634	1-163-129-00	CERAMIC CHIP	330PF	5%	50V
C635	1-163-113-00	CERAMIC CHIP	68PF	5%	50V
C636	1-126-177-11	ELECT	100MF	20%	6.3V
C637	1-164-161-11	CERAMIC CHIP	0.0022MF	10%	50V
C638	1-124-499-11	ELECT	1MF	20%	50V
C639	1-163-989-11	CERAMIC CHIP	0.033MF	10%	25V
C640	1-126-177-11	ELECT	100MF	20%	6.3V
C641	1-124-465-00	ELECT	0.47MF	20%	50V
C642	1-164-232-11	CERAMIC CHIP	0.01MF	10%	50V
C643	1-164-232-11	CERAMIC CHIP	0.01MF	10%	50V
C644	1-163-015-00	CERAMIC CHIP	0.0033MF	10%	50V
C645	1-163-986-00	CERAMIC CHIP	0.027MF	10%	25V
C646	1-126-177-11	ELECT	100MF	20%	6.3V
C647	1-124-438-00	ELECT	1MF	20%	50V
C648	1-163-088-00	CERAMIC CHIP	5PF	0.25PF	50V
C649	1-163-101-00	CERAMIC CHIP	22PF	5%	50V
C650	1-163-105-00	CERAMIC CHIP	33PF	5%	50V
C651	1-126-177-11	ELECT	100MF	20%	6.3V
C652	1-126-094-11	ELECT	4.7MF	20%	25V
C653	1-163-015-00	CERAMIC CHIP	0.0033MF	10%	50V
C654	1-163-111-00	CERAMIC CHIP	56PF	5%	50V
C655	1-126-094-11	ELECT	4.7MF	20%	25V
C656	1-163-035-00	CERAMIC CHIP	0.047MF		50V
C657	1-124-589-11	ELECT	47MF	20%	16V
C658	1-163-117-00	CERAMIC CHIP	100PF	5%	50V
C659	1-163-035-00	CERAMIC CHIP	0.047MF		50V
C660	1-126-177-11	ELECT	100MF	20%	6.3V
C661	1-124-598-11	ELECT	22MF	20%	25V
C662	1-163-035-00	CERAMIC CHIP	0.047MF		50V
C663	1-163-015-00	CERAMIC CHIP	0.0033MF	10%	50V
C664	1-164-232-11	CERAMIC CHIP	0.01MF		50V
C665	1-126-157-11	ELECT	10MF	20%	16V
C666	1-126-157-11	ELECT	10MF	20%	16V
C667	1-163-035-00	CERAMIC CHIP	0.047MF		50V
C668	1-163-035-00	CERAMIC CHIP	0.047MF		50V
C669	1-163-038-00	CERAMIC CHIP	0.1MF		25V
C670	1-163-038-00	CERAMIC CHIP	0.1MF		25V

When indicating parts by reference number, please include the board name.

www.hifiengine.com

MP-15

Ref.No	Part No.	Description			Remark
C671	1-163-038-00	CERAMIC CHIP	0.1MF		25V
C672	1-164-232-11	CERAMIC CHIP	0.01MF		50V
C673	1-163-035-00	CERAMIC CHIP	0.047MF		50V
C674	1-163-035-00	CERAMIC CHIP	0.047MF		50V
C675	1-163-109-00	CERAMIC CHIP	47PF	5%	50V
C676	1-163-109-00	CERAMIC CHIP	47PF	5%	50V
C677	1-163-113-00	CERAMIC CHIP	68PF	5%	50V
C801	1-124-768-11	ELECT	4.7MF	20%	50V
C802	1-124-767-00	ELECT	2.2MF	20%	50V
C803	1-124-446-11	ELECT	47MF	20%	10V
C804	1-124-446-11	ELECT	47MF	20%	10V
C805	1-126-320-11	ELECT	10MF	20%	16V
C806	1-163-077-00	CERAMIC CHIP	0.1MF	10%	25V
C807	1-163-020-00	CERAMIC CHIP	0.0082MF	10%	50V
C808	1-164-232-11	CERAMIC CHIP	0.01MF	10%	50V
C809	1-164-232-11	CERAMIC CHIP	0.01MF	10%	50V
C810	1-163-101-00	CERAMIC CHIP	22PF	5%	50V
C811	1-163-101-00	CERAMIC CHIP	22PF	5%	50V
C812	1-164-232-11	CERAMIC CHIP	0.01MF	10%	50V
C815	1-164-232-11	CERAMIC CHIP	0.01MF		50V
C816	1-124-446-11	ELECT	47MF	20%	10V
C817	1-124-446-11	ELECT	47MF	20%	10V
C818	1-164-232-11	CERAMIC CHIP	0.01MF		50V
C819	1-163-023-00	CERAMIC CHIP	0.015MF	10%	50V
C820	1-123-875-11	ELECT	10MF	20%	50V
C821	1-164-232-11	CERAMIC CHIP	0.01MF	10%	50V
C822	1-163-035-00	CERAMIC CHIP	0.047MF		50V
C823	1-163-035-00	CERAMIC CHIP	0.047MF		50V
C824	1-164-161-11	CERAMIC CHIP	0.0022MF	10%	50V
C825	1-164-161-11	CERAMIC CHIP	0.0022MF	10%	50V
C826	1-163-241-11	CERAMIC CHIP	39PF	5%	50V
C827	1-163-106-00	CERAMIC CHIP	36PF	5%	50V
C828	1-163-123-00	CERAMIC CHIP	180PF	5%	50V
C829	1-163-133-00	CERAMIC CHIP	470PF	5%	50V
C832	1-164-232-11	CERAMIC CHIP	0.01MF		50V
C840	1-124-443-00	ELECT	100MF	20%	10V
C841	1-164-232-11	CERAMIC CHIP	0.01MF		50V
C842	1-124-443-00	ELECT	100MF	20%	10V
C843	1-164-232-11	CERAMIC CHIP	0.01MF		50V
C844	1-164-232-11	CERAMIC CHIP	0.01MF		50V
C845	1-164-232-11	CERAMIC CHIP	0.01MF		50V
C850	1-163-038-00	CERAMIC CHIP	0.1MF		25V
C851	1-163-038-00	CERAMIC CHIP	0.1MF		25V
C901	1-163-035-00	CERAMIC CHIP	0.047MF		50V
C902	1-163-035-00	CERAMIC CHIP	0.047MF		50V
C904	1-163-038-00	CERAMIC CHIP	0.1MF		25V
C905	1-124-045-00	ELECT	4.7MF	20%	50V
C906	1-126-049-11	ELECT	22MF	20%	10V
C907	1-126-094-11	ELECT	4.7MF	20%	25V
C908	1-126-020-71	ELECT	22MF	20%	25V
C909	1-124-045-00	ELECT	4.7MF	20%	50V
C910	1-124-045-00	ELECT	4.7MF	20%	50V
C911	1-126-049-11	ELECT	22MF	20%	10V

Ref.No	Part No.	Description			Remark
C912	1-126-094-11	ELECT	4.7MF	20%	25V
C913	1-126-020-71	ELECT	22MF	20%	25V
C914	1-124-045-00	ELECT	4.7MF	20%	50V
C915	1-136-250-11	FILM	0.001MF	3%	100V
C916	1-136-232-51	FILM	0.0043MF	3%	100V
C917	1-136-250-11	FILM	0.001MF	3%	100V
C918	1-126-023-11	ELECT	100MF	20%	25V
C919	1-126-060-71	ELECT	22MF	20%	63V
C920	1-136-250-11	FILM	0.001MF	3%	100V
C921	1-126-023-11	ELECT	100MF	20%	25V
C922	1-136-250-11	FILM	0.001MF	3%	100V
C923	1-136-232-51	FILM	0.0043MF	3%	100V
C924	1-136-250-11	FILM	0.001MF	3%	100V
C925	1-126-023-11	ELECT	100MF	20%	25V
C926	1-126-060-71	ELECT	22MF	20%	63V
C927	1-136-250-11	FILM	0.001MF	3%	100V
C928	1-126-023-11	ELECT	100MF	20%	25V
C929	1-126-028-11	ELECT	2200MF	20%	25V
C930	1-126-028-11	ELECT	2200MF	20%	25V
C932	1-124-446-11	ELECT	47MF	20%	10V
C933	1-163-038-00	CERAMIC CHIP	0.1MF		25V
C934	1-126-013-11	ELECT	1000MF	20%	16V
C935	1-126-013-11	ELECT	1000MF	20%	16V
C936	1-126-044-11	ELECT	1MF	20%	50V
C937	1-124-478-11	ELECT	100MF	20%	25V
C938	1-163-035-00	CERAMIC CHIP	0.047MF		50V
C939	1-163-015-00	CERAMIC CHIP	0.0033MF	10%	50V
C940	1-126-013-11	ELECT	1000MF	20%	16V
C941	1-126-013-11	ELECT	1000MF	20%	16V
C942	1-124-477-11	ELECT	47MF	20%	25V
C943	1-163-019-00	CERAMIC CHIP	0.0068MF	10%	50V
C950	1-126-177-11	ELECT	100MF	20%	6.3V
C951	1-163-038-00	CERAMIC CHIP	0.1MF		25V
C952	1-163-038-00	CERAMIC CHIP	0.1MF		25V
C953	1-126-320-11	ELECT	10MF	20%	16V
C960	1-124-984-71	ELECT	470MF	20%	6.3V

FILTER

CF101	1-567-657-11	FILTER, CERAMIC (SFS-MC TYPE)
CF102	1-527-831-00	FILTER, CERAMIC (MDP-515D)

CONNECTOR

CN101	*1-566-706-11	CONNECTOR, BOARD TO BOARD 12P (MDP-515D)
CN601	*1-564-032-00	PIN, CONNECTOR 7P
CN602	1-563-493-11	CONNECTOR, F.P.C 28P
CN603	*1-506-483-21	PIN, CONNECTOR 4P
CN604	1-506-486-11	PIN, CONNECTOR 7P
CN605	*1-506-488-11	PIN, CONNECTOR 9P
CN606	1-506-481-11	PIN, CONNECTOR 2P
CN607	1-506-482-11	PIN, CONNECTOR 3P
CN608	*1-506-481-11	PIN, CONNECTOR 2P
CN801	*1-566-706-11	CONNECTOR, BOARD TO BOARD 12P

When indicating parts by reference number, please include the board name.

www.hifiengine.com

Ref.No	Part No.	Description	Remark
CN802	*1-564-028-00	PIN, CONNECTOR 3P	
CN803	1-506-471-11	PIN, CONNECTOR 6P	
		JACK	
CNJ101	1-561-534-82	SOCKET 21P	
CNJ102	1-565-351-51	JACK, PIN 3P	
CNJ103	8-759-977-71	GP1F31T	
CNJ104	1-537-005-21	JACK BOARD	
CNJ601	1-507-678-00	JACK	
CNJ602	1-507-678-00	JACK	
		TRIMMER	
CV601	1-141-227-00	CAP, CERAMIC TRIMMER	
CV602	1-141-227-00	CAP, CERAMIC TRIMMER	
		DIODE	
D101	8-719-110-33	DIODE RD12ES-B3	
D102	8-719-911-19	DIODE 1SS119	
D103	8-719-911-19	DIODE 1SS119	
D104	8-719-911-19	DIODE 1SS119	
D105	8-719-911-19	DIODE 1SS119	
D601	8-719-911-19	DIODE 1SS119 (MDP-515D)	
D602	8-719-911-19	DIODE 1SS119 (MDP-515D)	
D603	8-719-911-19	DIODE 1SS119	
D604	8-719-907-19	DIODE FC52M-5	
D605	8-719-911-19	DIODE 1SS119	
D606	8-719-110-22	DIODE RD11ES-B2	
D607	8-719-110-22	DIODE RD11ES-B2	
D608	8-719-911-19	DIODE 1SS119	
D609	8-719-911-19	DIODE 1SS119	
D610	8-719-911-19	DIODE 1SS119	
D611	8-719-110-03	DIODE RD7.5ES-B2	
D612	8-719-911-19	DIODE 1SS119	
D613	8-719-911-19	DIODE 1SS119	
D801	8-719-923-64	DIODE KV1236D	
D802	8-719-907-19	DIODE FC52M-5	
D803	8-719-907-19	DIODE FC52M-5	
D804	8-719-911-19	DIODE 1SS119	
D805	8-719-911-19	DIODE 1SS119	
D806	8-719-100-05	DIODE MA152WK	
D807	8-719-100-05	DIODE MA152WK	
D808	8-719-100-05	DIODE MA152WK	
D811	8-719-911-19	DIODE 1SS119	
D812	8-719-911-19	DIODE 1SS119	
D813	8-719-911-19	DIODE 1SS119	
D815	8-719-911-19	DIODE 1SS119	
D820	8-719-200-91	DIODE 11EQS10	
D821	8-719-200-91	DIODE 11EQS10	
D822	8-719-200-91	DIODE 11EQS10	
D823	8-719-200-91	DIODE 11EQS10	
D903	8-719-911-19	DIODE 1SS119	
D910	8-719-911-19	DIODE 1SS119	

Ref.No	Part No.	Description	Remark
D911	8-719-911-19	DIODE 1SS119	
		FILTER	
FL101	1-236-580-11	FILTER, LOW PASS	
FL102	1-235-943-11	BPF (MDP-515D)	
FL103	1-236-262-11	FILTER, BAND PASS	
FL104	1-236-580-11	FILTER, LOW PASS	
FL105	1-409-431-11	COIL, TRAP (MDP-515D)	
FL106	1-409-447-11	COIL, TRAP	
FL601	1-421-927-21	FILTER, NOISE	
FL602	1-235-922-11	FILTER, LOW PASS (1.7MHZ)	
FL603	1-421-927-21	FILTER, NOISE	
FL801	1-424-031-11	FILTER, NOISE	
FL802	1-424-031-11	FILTER, NOISE	
FL803	1-424-031-11	FILTER, NOISE	
FL804	1-424-031-11	FILTER, NOISE	
FL805	1-424-031-11	FILTER, NOISE	
FL806	1-424-031-11	FILTER, NOISE	
FL807	1-424-031-11	FILTER, NOISE	
FL808	1-424-031-11	FILTER, NOISE	
FL809	1-424-031-11	FILTER, NOISE	
FL810	1-424-031-11	FILTER, NOISE	
FL811	1-424-031-11	FILTER, NOISE	
FL812	1-424-031-11	FILTER, NOISE	
		IC	
IC101	8-759-982-10	IC RC7809FA	
IC102	8-759-941-68	IC BA7131F	
IC103	8-759-941-68	IC BA7131F (MDP-515D)	
IC104	8-752-006-12	IC CX20061	
IC105	8-752-322-34	IC CXL5003M	
IC106	8-752-036-23	IC CXA1254Q	
IC107	8-759-941-68	IC BA7131F (MDP-515D)	
IC108	8-759-907-81	IC SN74LS221NS	
IC109	8-759-983-48	IC CXD1152	
IC110	8-759-100-95	IC UPC324G2	
IC111	8-752-036-24	IC CXA1255Q	
IC113	8-759-204-97	IC TC74HCU04F	
IC601	8-759-305-28	IC HD74HC4040FP (MDP-515D)	
IC602	8-759-941-68	IC BA7131F (MDP-515D)	
IC603	8-759-630-74	M50455-080FP	
IC604	8-759-208-11	IC TC4053BFHB	
IC605	8-759-902-88	IC SN74LS123NS	
IC606	8-759-200-84	IC TC4081BF	
IC607	8-759-700-07	IC LM2903M	
IC608	8-759-207-28	IC TC9015P	
IC609	8-759-208-11	IC TC4053BFHB	
IC610	8-759-603-24	IC CX20197	
IC611	8-759-208-11	IC TC4053BFHB	
IC612	8-752-033-14	IC CXA1081Q	
IC613	8-759-988-40	IC MB89795-119	
IC614	8-759-987-71	IC MSM72H032	

When indicating parts by reference number, please include the board name.

www.hifiengine.com

MP-15

Ref.No	Part No.	Description	Remark
IC615	8-759-100-96	IC UPC4558G2	
IC616	8-759-208-15	IC TC4066BFHB	
IC617	8-759-100-96	IC UPC4558G2	
IC618	8-759-231-92	IC TA7291P	
IC619	8-759-201-53	IC TC40H000F	
IC620	8-759-932-64	IC BU4052BF	
IC621	8-759-208-11	IC TC4053BFHB	
IC801	8-752-325-59	IC CXD1165Q	
IC802	8-759-908-17	IC TL082CPS	
IC803	8-759-908-17	IC TL082CPS	
IC805	8-759-927-29	IC SN74HCU04NS	
IC809	8-759-208-15	IC TC4066BFHB	
IC811	8-752-328-61	IC CXD1244S	
IC812	8-759-926-17	IC SN74HC153NS	
IC813	8-759-205-06	IC TC74HC74F	
IC814	8-759-982-44	IC NJM79L05A	
IC816	8-759-604-29	IC M5F7805	
IC817	8-759-979-09	IC PCM58P	
IC818	8-759-979-09	IC PCM58P	
IC819	8-759-701-21	IC NJM5532D-D	
IC820	8-759-701-21	IC NJM5532D-D	
IC821	8-759-604-33	IC M5F7812	
IC822	8-759-604-51	IC M5F7912	
IC823	8-759-700-43	IC NJM4558M	
IC824	8-759-204-97	IC TC74HCU04F	

JUMPER RESISTOR

JR101	1-216-295-00	METAL GLAZE	0	5%	1/10W (MDP-315)
JR102	1-216-295-00	METAL GLAZE	0	5%	1/10W (MDP-315)
JR103	1-216-295-00	METAL GLAZE	0	5%	1/10W (MDP-315)
JR601	1-216-295-00	METAL GLAZE	0	5%	1/10W (MDP-315)
JR602	1-216-295-00	METAL GLAZE	0	5%	1/10W (MDP-315)
JR604	1-216-295-00	METAL GLAZE	0	5%	1/10W (MDP-315)

COIL

L101	1-408-421-00	INDUCTOR	100UH
L102	1-408-421-00	INDUCTOR	100UH
L103	1-408-417-00	INDUCTOR	47UH
L104	1-408-417-00	INDUCTOR	47UH
L105	1-408-419-00	INDUCTOR	68UH
L106	1-408-417-00	INDUCTOR	47UH
L107	1-408-411-00	INDUCTOR	15UH
L108	1-408-419-00	INDUCTOR	68UH
L109	1-408-609-41	INDUCTOR	33UH
L110	1-408-421-00	INDUCTOR	100UH
L111	1-408-425-00	INDUCTOR	220UH
L112	1-408-417-00	INDUCTOR	47UH
L113	1-408-421-00	INDUCTOR	100UH
L114	1-408-421-00	INDUCTOR	100UH
L115	1-408-609-41	INDUCTOR	33UH
L116	1-408-421-00	INDUCTOR	100UH
L117	1-408-421-00	INDUCTOR	100UH
L118	1-408-421-00	INDUCTOR	100UH
L119	1-408-424-00	INDUCTOR	180UH
L120	1-408-421-00	INDUCTOR	100UH
L123	1-408-421-00	INDUCTOR	100UH
L124	1-408-417-00	INDUCTOR	47UH
L601	1-408-411-00	INDUCTOR	15UH
L602	1-408-421-00	INDUCTOR	100UH
L603	1-408-409-00	INDUCTOR	10UH
L604	1-408-420-00	INDUCTOR	82UH
L605	1-408-420-00	INDUCTOR	82UH
L606	1-408-409-00	INDUCTOR	10UH
L607	1-424-033-21	FILTER, NOISE	
L608	1-408-409-00	INDUCTOR	10UH
L609	1-408-409-00	INDUCTOR	10UH
L803	1-424-033-21	FILTER, NOISE	
L805	1-424-033-21	FILTER, NOISE	

VARIABLE COIL

LV801	1-426-212-11	COIL (RF)

TRANSISTOR

Q101	8-729-100-66	TRANSISTOR 2SC1623
Q102	8-729-100-66	TRANSISTOR 2SC1623
Q103	8-729-100-66	TRANSISTOR 2SC1623
Q104	8-729-100-66	TRANSISTOR 2SC1623
Q105	8-729-100-66	TRANSISTOR 2SC1623
Q106	8-729-100-66	TRANSISTOR 2SC1623
Q107	8-729-100-66	TRANSISTOR 2SC1623
Q108	8-729-100-66	TRANSISTOR 2SC1623
Q109	8-729-216-22	TRANSISTOR 2SA1162
Q110	8-729-100-66	TRANSISTOR 2SC1623
Q111	8-729-100-66	TRANSISTOR 2SC1623
Q112	8-729-100-66	TRANSISTOR 2SC1623
Q114	8-729-100-66	TRANSISTOR 2SC1623
Q115	8-729-100-66	TRANSISTOR 2SC1623 (MDP-515D)
Q116	8-729-100-66	TRANSISTOR 2SC1623 (MDP-515D)
Q117	8-729-100-66	TRANSISTOR 2SC1623
Q118	8-729-100-66	TRANSISTOR 2SC1623
Q119	8-729-100-66	TRANSISTOR 2SC1623
Q120	8-729-901-01	TRANSISTOR DTC144EK (MDP-515D)
Q121	8-729-100-66	TRANSISTOR 2SC1623
Q122	8-729-100-66	TRANSISTOR 2SC1623
Q123	8-729-901-01	TRANSISTOR DTC144EK (MDP-515D)
Q124	8-729-901-01	TRANSISTOR DTC144EK (MDP-515D)
Q125	8-729-901-01	TRANSISTOR DTC144EK (MDP-515D)
Q126	8-729-216-22	TRANSISTOR 2SA1162
Q128	8-729-100-66	TRANSISTOR 2SC1623 (MDP-515D)
Q129	8-729-100-66	TRANSISTOR 2SC1623
Q130	8-729-216-22	TRANSISTOR 2SA1162
Q131	8-729-100-66	TRANSISTOR 2SC1623
Q132	8-729-100-66	TRANSISTOR 2SC1623
Q133	8-729-901-00	TRANSISTOR DTC124EK
Q134	8-729-901-05	TRANSISTOR DTA124EK
Q135	8-729-901-01	TRANSISTOR DTC144EK (MDP-515D)

When indicating parts by reference number, please include the board name.

www.hifiengine.com

Ref.No	Part No.	Description	Remark
Q136	8-729-901-01	TRANSISTOR DTC144EK (MDP-515D)	
Q137	8-729-100-66	TRANSISTOR 2SC1623	
Q138	8-729-140-75	TRANSISTOR 2SD999CLCK	
Q139	8-729-100-66	TRANSISTOR 2SC1623	
Q140	8-729-100-66	TRANSISTOR 2SC1623	
Q141	8-729-100-66	TRANSISTOR 2SC1623	
Q142	8-729-100-66	TRANSISTOR 2SC1623	
Q143	8-729-100-66	TRANSISTOR 2SC1623	
Q144	8-729-100-66	TRANSISTOR 2SC1623	
Q145	8-729-901-00	TRANSISTOR DTC124EK	
Q146	8-729-100-66	TRANSISTOR 2SC1623	
Q147	8-729-374-02	TRANSISTOR 2SB740	
Q148	8-729-216-22	TRANSISTOR 2SA1162	
Q150	8-729-100-66	TRANSISTOR 2SC1623	
Q151	8-729-901-01	TRANSISTOR DTC144EK (MDP-515D)	
Q152	8-729-100-66	TRANSISTOR 2SC1623	
Q153	8-729-901-01	TRANSISTOR DTC144EK	
Q154	8-729-100-66	TRANSISTOR 2SC1623	
Q155	8-729-100-66	TRANSISTOR 2SC1623	
Q156	8-729-903-10	TRANSISTOR FMW1	
Q157	8-729-903-10	TRANSISTOR FMW1	
Q158	8-729-100-66	TRANSISTOR 2SC1623	
Q159	8-729-100-66	TRANSISTOR 2SC1623	
Q160	8-729-100-66	TRANSISTOR 2SC1623	
Q161	8-729-100-66	TRANSISTOR 2SC1623	
Q162	8-729-100-66	TRANSISTOR 2SC1623	
Q163	8-729-216-22	TRANSISTOR 2SA1162	
Q164	8-729-100-66	TRANSISTOR 2SC1623 (MDP-515D)	
Q165	8-729-100-66	TRANSISTOR 2SC1623 (MDP-515D)	
Q166	8-729-901-01	TRANSISTOR DTC144EK	
Q167	8-729-901-01	TRANSISTOR DTC144EK (MDP-515D)	
Q168	8-729-100-66	TRANSISTOR 2SC1623	
Q169	8-729-100-66	TRANSISTOR 2SC1623	
Q601	8-729-100-66	TRANSISTOR 2SC1623	
Q602	8-729-901-01	TRANSISTOR DTC144EK	
Q603	8-729-100-66	TRANSISTOR 2SC1623	
Q604	8-729-901-01	TRANSISTOR DTC144EK	
Q605	8-729-901-01	TRANSISTOR DTC144EK	
Q606	8-729-100-66	TRANSISTOR 2SC1623	
Q607	8-729-100-66	TRANSISTOR 2SC1623	
Q608	8-729-901-01	TRANSISTOR DTC144EK	
Q609	8-729-901-06	TRANSISTOR DTA144EK	
Q610	8-729-216-22	TRANSISTOR 2SA1162	
Q611	8-729-140-97	TRANSISTOR 2SB734-34	
Q612	8-729-901-00	TRANSISTOR DTC124EK	
Q613	8-729-100-66	TRANSISTOR 2SC1623	
Q614	8-729-100-66	TRANSISTOR 2SC1623	
Q615	8-729-901-00	TRANSISTOR DTC124EK	
Q618	8-729-216-22	TRANSISTOR 2SA1162	
Q801	8-729-900-53	TRANSISTOR DTC114EK	
Q802	8-729-100-67	TRANSISTOR 2SC1623 L7	
Q803	8-729-900-53	TRANSISTOR DTC114EK	
Q804	8-729-900-53	TRANSISTOR DTC114EK	

Ref.No	Part No.	Description	Remark
Q806	8-729-901-05	TRANSISTOR DTA124EK	
Q807	8-729-900-53	TRANSISTOR DTC114EK	
Q808	8-729-900-53	TRANSISTOR DTC114EK	
Q809	8-729-901-06	TRANSISTOR DTA144EK	
Q810	8-729-901-06	TRANSISTOR DTA144EK	
Q811	8-729-216-22	TRANSISTOR 2SA1162	
Q812	8-729-303-37	TRANSISTOR 2SD655-E	
Q813	8-729-303-37	TRANSISTOR 2SD655-E	
Q814	8-729-901-05	TRANSISTOR DTA124EK	
Q815	8-729-901-05	TRANSISTOR DTA124EK	

RESISTOR

R101 ⚠	1-212-950-00	FUSIBLE	4.7	5%	1/2W	F
R102	1-216-059-00	METAL GLAZE	2.7K	5%	1/10W	
R103	1-216-049-00	METAL GLAZE	1K	5%	1/10W	
R104	1-216-051-00	METAL GLAZE	1.2K	5%	1/10W	
R105	1-216-049-00	METAL GLAZE	1K	5%	1/10W	
R106	1-216-049-00	METAL GLAZE	1K	5%	1/10W	
R107	1-216-045-00	METAL GLAZE	680	5%	1/10W	
R108	1-216-049-00	METAL GLAZE	1K	5%	1/10W	
R109	1-216-073-00	METAL GLAZE	10K	5%	1/10W	
R110	1-216-053-00	METAL GLAZE	1.5K	5%	1/10W	
R111	1-216-037-00	METAL GLAZE	330	5%	1/10W	
R112	1-216-041-00	METAL GLAZE	470	5%	1/10W	
R113	1-216-053-00	METAL GLAZE	1.5K	5%	1/10W	
R114	1-216-065-00	METAL GLAZE	4.7K	5%	1/10W	
R115	1-216-069-00	METAL GLAZE	6.8K	5%	1/10W	
R116	1-216-051-00	METAL GLAZE	1.2K	5%	1/10W	
R117	1-216-049-00	METAL GLAZE	1K	5%	1/10W	
R118	1-216-063-00	METAL GLAZE	3.9K	5%	1/10W	
R119	1-216-049-00	METAL GLAZE	1K	5%	1/10W	
R120	1-216-065-00	METAL GLAZE	4.7K	5%	1/10W	
R121	1-216-049-00	METAL GLAZE	1K	5%	1/10W	
R122	1-216-049-00	METAL GLAZE	1K	5%	1/10W	
R123	1-216-053-00	METAL GLAZE	1.5K	5%	1/10W	
R124	1-216-071-00	METAL GLAZE	8.2K	5%	1/10W	
R125	1-216-039-00	METAL GLAZE	390	5%	1/10W	
R126	1-216-053-00	METAL GLAZE	1.5K	5%	1/10W	
R127	1-216-053-00	METAL GLAZE	1.5K	5%	1/10W	
R128	1-216-049-00	METAL GLAZE	1K	5%	1/10W	
R129	1-216-049-00	METAL GLAZE	1K	5%	1/10W	
R131	1-216-065-00	METAL GLAZE	4.7K	5%	1/10W	
R132	1-216-067-00	METAL GLAZE	5.6K	5%	1/10W	
R133	1-216-121-00	METAL GLAZE	1M	5%	1/10W	
R134	1-216-045-00	METAL GLAZE	680	5%	1/10W	
R135	1-216-057-00	METAL GLAZE	2.2K	5%	1/10W	
R136	1-216-061-00	METAL GLAZE	3.3K	5%	1/10W	
R140	1-216-057-00	METAL GLAZE	2.2K	5%	1/10W	
R141	1-216-073-00	METAL GLAZE	10K	5%	1/10W	
R142	1-216-049-00	METAL GLAZE	1K	5%	1/10W	
R143	1-216-045-00	METAL GLAZE	680	5%	1/10W (MDP-515D)	
R144	1-216-051-00	METAL GLAZE	1.2K	5%	1/10W (MDP-515D)	
R145	1-216-061-00	METAL GLAZE	3.3K	5%	1/10W (MDP-515D)	

When indicating parts by reference number, please include the board name.

Note: The components identified by mark ⚠ or dotted line with mark ⚠ are critical for safety. Replace only with part number specified.

www.hifiengine.com

MP-15

Ref.No	Part No.	Description				Remark
R146	1-216-049-00	METAL GLAZE	1K	5%	1/10W	
R147	1-216-043-00	METAL GLAZE	560	5%	1/10W	
R148	1-216-053-00	METAL GLAZE	1.5K	5%	1/10W	
R149	1-216-061-00	METAL GLAZE	3.3K	5%	1/10W	
R150	1-216-059-00	METAL GLAZE	2.7K	5%	1/10W	
R151	1-216-025-00	METAL GLAZE	100	5%	1/10W	
R152	1-216-059-00	METAL GLAZE	2.7K	5%	1/10W	
R153	1-216-049-00	METAL GLAZE	1K	5%	1/10W	
R154	1-216-049-00	METAL GLAZE	1K	5%	1/10W	
R155	1-216-049-00	METAL GLAZE	1K	5%	1/10W	
R157	1-216-083-00	METAL GLAZE	27K	5%	1/10W	
R158	1-216-079-00	METAL GLAZE	18K	5%	1/10W	
R159	1-216-075-00	METAL GLAZE	12K	5%	1/10W	
R160	1-216-073-00	METAL GLAZE	10K	5%	1/10W	
R161	1-216-053-00	METAL GLAZE	1.5K	5%	1/10W	
R162	1-216-059-00	METAL GLAZE	2.7K	5%	1/10W	
R163	1-216-115-00	METAL GLAZE	560K	5%	1/10W	
R164	1-216-021-00	METAL GLAZE	68	5%	1/10W	
R165	1-249-410-11	CARBON	270	5%	1/4W	
R166	1-216-021-00	METAL GLAZE	68	5%	1/10W	
R167	1-216-047-00	METAL GLAZE	820	5%	1/10W (MDP-515D)	
R168	1-249-410-11	CARBON	270	5%	1/4W	
R169	1-216-055-00	METAL GLAZE	1.8K	5%	1/10W	
R170	1-216-113-00	METAL GLAZE	470K	5%	1/10W (MDP-515D)	
R171	1-216-097-00	METAL GLAZE	100K	5%	1/10W	
R172	1-216-748-11	METAL GLAZE	39K	5%	1/10W	
R175	1-216-041-00	METAL GLAZE	470	5%	1/10W	
R176	1-216-053-00	METAL GLAZE	1.5K	5%	1/10W	
R177	1-216-049-00	METAL GLAZE	1K	5%	1/10W	
R178	1-216-049-00	METAL GLAZE	1K	5%	1/10W	
R179	1-216-055-00	METAL GLAZE	1.8K	5%	1/10W	
R180	1-216-055-00	METAL GLAZE	1.8K	5%	1/10W (MDP-515D)	
R181	1-216-057-00	METAL GLAZE	2.2K	5%	1/10W (MDP-515D)	
R182	1-216-057-00	METAL GLAZE	2.2K	5%	1/10W	
R183	1-216-049-00	METAL GLAZE	1K	5%	1/10W (MDP-515D)	
R184	1-216-049-00	METAL GLAZE	1K	5%	1/10W	
R185	1-216-081-00	METAL GLAZE	22K	5%	1/10W	
R186	1-216-081-00	METAL GLAZE	22K	5%	1/10W	
R190	1-216-039-00	METAL GLAZE	390	5%	1/10W	
R191	1-216-059-00	METAL GLAZE	2.7K	5%	1/10W	
R192	1-216-748-11	METAL GLAZE	39K	5%	1/10W	
R193	1-216-091-00	METAL GLAZE	56K	5%	1/10W (MDP-515D)	
R193	1-216-748-11	METAL GLAZE	39K	5%	1/10W (MDP-315)	
R195	1-216-043-00	METAL GLAZE	560	5%	1/10W	
R197	1-216-097-00	METAL GLAZE	100K	5%	1/10W	
R198	1-216-073-00	METAL GLAZE	10K	5%	1/10W	
R199	1-216-073-00	METAL GLAZE	10K	5%	1/10W	
R200	1-216-073-00	METAL GLAZE	10K	5%	1/10W	
R201	1-216-073-00	METAL GLAZE	10K	5%	1/10W	
R202	1-216-073-00	METAL GLAZE	10K	5%	1/10W	
R203	1-216-097-00	METAL GLAZE	100K	5%	1/10W	
R204	1-216-097-00	METAL GLAZE	100K	5%	1/10W	
R205	1-216-053-00	METAL GLAZE	1.5K	5%	1/10W	

Ref.No	Part No.	Description				Remark
R206	1-216-081-00	METAL GLAZE	22K	5%	1/10W	
R207	1-216-053-00	METAL GLAZE	1.5K	5%	1/10W	
R208	1-216-699-11	METAL CHIP	100K	0.50%	1/10W	
R209	1-216-057-00	METAL GLAZE	2.2K	5%	1/10W	
R210	1-216-065-00	METAL GLAZE	4.7K	5%	1/10W	
R211	1-216-067-00	METAL GLAZE	5.6K	5%	1/10W	
R212	1-216-057-00	METAL GLAZE	2.2K	5%	1/10W	
R213	1-216-065-00	METAL GLAZE	4.7K	5%	1/10W	
R214	1-216-113-00	METAL GLAZE	470K	5%	1/10W	
R215	1-216-063-00	METAL GLAZE	3.9K	5%	1/10W	
R216	1-216-089-00	METAL GLAZE	47K	5%	1/10W	
R217	1-216-077-00	METAL GLAZE	15K	5%	1/10W	
R218	1-216-113-00	METAL GLAZE	470K	5%	1/10W	
R219	1-216-097-00	METAL GLAZE	100K	5%	1/10W	
R220	1-216-079-00	METAL GLAZE	18K	5%	1/10W	
R221	1-216-079-00	METAL GLAZE	18K	5%	1/10W	
R222	1-216-073-00	METAL GLAZE	10K	5%	1/10W	
R223	1-216-113-00	METAL GLAZE	470K	5%	1/10W	
R224	1-216-061-00	METAL GLAZE	3.3K	5%	1/10W	
R226	1-216-073-00	METAL GLAZE	10K	5%	1/10W	
R227	1-216-073-00	METAL GLAZE	10K	5%	1/10W	
R228	1-216-073-00	METAL GLAZE	10K	5%	1/10W	
R229	1-216-073-00	METAL GLAZE	10K	5%	1/10W	
R230	1-216-049-00	METAL GLAZE	1K	5%	1/10W	
R231	1-216-063-00	METAL GLAZE	3.9K	5%	1/10W	
R232	1-216-073-00	METAL GLAZE	10K	5%	1/10W	
R233	1-216-057-00	METAL GLAZE	2.2K	5%	1/10W	
R234	1-216-061-00	METAL GLAZE	3.3K	5%	1/10W	
R235	1-216-069-00	METAL GLAZE	6.8K	5%	1/10W	
R236	1-216-037-00	METAL GLAZE	330	5%	1/10W	
R237	1-216-079-00	METAL GLAZE	18K	5%	1/10W	
R238	1-216-081-00	METAL GLAZE	22K	5%	1/10W	
R239	1-216-115-00	METAL GLAZE	560K	5%	1/10W (MDP-515D)	
R240	1-216-121-00	METAL GLAZE	1M	5%	1/10W	
R241	1-216-097-00	METAL GLAZE	100K	5%	1/10W	
R242	1-216-097-00	METAL GLAZE	100K	5%	1/10W	
R243	1-216-748-11	METAL GLAZE	39K	5%	1/10W	
R244	1-216-079-00	METAL GLAZE	18K	5%	1/10W	
R245	1-216-121-00	METAL GLAZE	1M	5%	1/10W	
R246	1-216-089-00	METAL GLAZE	47K	5%	1/10W	
R247	1-216-097-00	METAL GLAZE	100K	5%	1/10W	
R248	1-216-083-00	METAL GLAZE	27K	5%	1/10W	
R249	1-216-083-00	METAL GLAZE	27K	5%	1/10W	
R250	1-216-113-00	METAL GLAZE	470K	5%	1/10W	
R252	1-216-083-00	METAL GLAZE	27K	5%	1/10W	
R253	1-216-097-00	METAL GLAZE	100K	5%	1/10W	
R254	1-216-113-00	METAL GLAZE	470K	5%	1/10W	
R255	1-216-057-00	METAL GLAZE	2.2K	5%	1/10W	
R256	1-216-095-00	METAL GLAZE	82K	5%	1/10W	
R257	1-216-113-00	METAL GLAZE	470K	5%	1/10W	
R258	1-216-049-00	METAL GLAZE	1K	5%	1/10W	
R259	1-216-109-00	METAL GLAZE	330K	5%	1/10W	
R260	1-216-089-00	METAL GLAZE	47K	5%	1/10W (MDP-515D)	

When indicating parts by reference number, please include the board name.

www.hifiengine.com

Ref.No	Part No.	Description				Remark
R260	1-216-295-00	METAL GLAZE	0	5%	1/10W	(MDP-315)
R261	1-216-061-00	METAL GLAZE	3.3K	5%	1/10W	(MDP-515D)
R261	1-216-295-00	METAL GLAZE	0	5%	1/10W	(MDP-315)
R262	1-216-109-00	METAL GLAZE	330K	5%	1/10W	(MDP-515D)
R263	1-216-075-00	METAL GLAZE	12K	5%	1/10W	(MDP-515D)
R264	1-216-748-11	METAL GLAZE	39K	5%	1/10W	(MDP-515D)
R265	1-216-079-00	METAL GLAZE	18K	5%	1/10W	
R266	1-216-077-00	METAL GLAZE	15K	5%	1/10W	
R267	1-216-059-00	METAL GLAZE	2.7K	5%	1/10W	
R268	1-216-043-00	METAL GLAZE	560	5%	1/10W	
R269	1-216-059-00	METAL GLAZE	2.7K	5%	1/10W	
R270	1-216-059-00	METAL GLAZE	2.7K	5%	1/10W	
R271	1-216-025-00	METAL GLAZE	100	5%	1/10W	
R272	1-216-057-00	METAL GLAZE	2.2K	5%	1/10W	
R273	1-216-053-00	METAL GLAZE	1.5K	5%	1/10W	
R274	1-216-043-00	METAL GLAZE	560	5%	1/10W	
R275	1-216-049-00	METAL GLAZE	1K	5%	1/10W	
R276	1-216-099-00	METAL GLAZE	120K	5%	1/10W	(MDP-515D)
R277	1-216-059-00	METAL GLAZE	2.7K	5%	1/10W	
R278	1-216-065-00	METAL GLAZE	4.7K	5%	1/10W	
R279	1-249-416-11	CARBON	820	5%	1/4W	
R281	1-216-021-00	METAL GLAZE	68	5%	1/10W	
R282	1-249-389-11	CARBON	4.7	5%	1/4W	
R283	1-216-057-00	METAL GLAZE	2.2K	5%	1/10W	
R284	1-216-117-00	METAL GLAZE	680K	5%	1/10W	
R285	1-216-073-00	METAL GLAZE	10K	5%	1/10W	
R286	1-216-067-00	METAL GLAZE	5.6K	5%	1/10W	
R290	1-216-091-00	METAL GLAZE	56K	5%	1/10W	
R291	1-216-089-00	METAL GLAZE	47K	5%	1/10W	
R292	1-216-063-00	METAL GLAZE	3.9K	5%	1/10W	
R293	1-216-049-00	METAL GLAZE	1K	5%	1/10W	(MDP-515D)
R293	1-216-295-00	METAL GLAZE	0	5%	1/10W	(MDP-315)
R294	1-216-035-00	METAL GLAZE	270	5%	1/10W	(MDP-515D)
R294	1-216-295-00	METAL GLAZE	0	5%	1/10W	(MDP-315)
R295	1-216-061-00	METAL GLAZE	3.3K	5%	1/10W	
R296	1-216-049-00	METAL GLAZE	1K	5%	1/10W	
R297	1-216-037-00	METAL GLAZE	330	5%	1/10W	
R298	1-216-031-00	METAL GLAZE	180	5%	1/10W	
R299	1-216-049-00	METAL GLAZE	1K	5%	1/10W	
R300	1-216-049-00	METAL GLAZE	1K	5%	1/10W	
R301	1-216-065-00	METAL GLAZE	4.7K	5%	1/10W	
R302	1-216-033-00	METAL GLAZE	220	5%	1/10W	
R303	1-216-033-00	METAL GLAZE	220	5%	1/10W	
R304	1-216-033-00	METAL GLAZE	220	5%	1/10W	
R305	1-216-055-00	METAL GLAZE	1.8K	5%	1/10W	
R306	1-216-033-00	METAL GLAZE	220	5%	1/10W	
R307	1-216-047-00	METAL GLAZE	820	5%	1/10W	
R308	1-216-081-00	METAL GLAZE	22K	5%	1/10W	
R309	1-216-748-11	METAL GLAZE	39K	5%	1/10W	
R310	1-216-057-00	METAL GLAZE	2.2K	5%	1/10W	
R311	1-216-033-00	METAL GLAZE	220	5%	1/10W	
R312	1-216-081-00	METAL GLAZE	22K	5%	1/10W	
R313	1-216-041-00	METAL GLAZE	470	5%	1/10W	

Ref.No	Part No.	Description				Remark
R314	1-216-059-00	METAL GLAZE	2.7K	5%	1/10W	
R316	1-216-085-00	METAL GLAZE	33K	5%	1/10W	
R317	1-216-085-00	METAL GLAZE	33K	5%	1/10W	
R318	1-216-097-00	METAL GLAZE	100K	5%	1/10W	
R319	1-216-033-00	METAL GLAZE	220	5%	1/10W	
R320	1-216-057-00	METAL GLAZE	2.2K	5%	1/10W	
R321	1-216-047-00	METAL GLAZE	820	5%	1/10W	
R322	1-216-085-00	METAL GLAZE	33K	5%	1/10W	
R323	1-216-097-00	METAL GLAZE	100K	5%	1/10W	
R324	1-216-097-00	METAL GLAZE	100K	5%	1/10W	
R325	1-216-061-00	METAL GLAZE	3.3K	5%	1/10W	
R326	1-216-085-00	METAL GLAZE	33K	5%	1/10W	
R327	1-216-073-00	METAL GLAZE	10K	5%	1/10W	
R328	1-216-073-00	METAL GLAZE	10K	5%	1/10W	
R329	1-216-049-00	METAL GLAZE	1K	5%	1/10W	
R330	1-216-047-00	METAL GLAZE	820	5%	1/10W	
R331	1-216-049-00	METAL GLAZE	1K	5%	1/10W	
R332	1-216-047-00	METAL GLAZE	820	5%	1/10W	
R333	1-216-051-00	METAL GLAZE	1.2K	5%	1/10W	
R334	1-216-051-00	METAL GLAZE	1.2K	5%	1/10W	
R335	1-216-049-00	METAL GLAZE	1K	5%	1/10W	
R336	1-216-049-00	METAL GLAZE	1K	5%	1/10W	
R337	1-216-051-00	METAL GLAZE	1.2K	5%	1/10W	
R338	1-216-049-00	METAL GLAZE	1K	5%	1/10W	
R339	1-216-049-00	METAL GLAZE	1K	5%	1/10W	
R340	1-216-051-00	METAL GLAZE	1.2K	5%	1/10W	
R341	1-216-057-00	METAL GLAZE	2.2K	5%	1/10W	
R342	1-216-121-00	METAL GLAZE	1M	5%	1/10W	
R343	1-216-121-00	METAL GLAZE	1M	5%	1/10W	
R344	1-216-097-00	METAL GLAZE	100K	5%	1/10W	(MDP-515D)
R345	1-216-095-00	METAL GLAZE	82K	5%	1/10W	(MDP-515D)
R346	1-216-097-00	METAL GLAZE	100K	5%	1/10W	(MDP-515D)
R347	1-216-095-00	METAL GLAZE	82K	5%	1/10W	(MDP-515D)
R348	1-216-065-00	METAL GLAZE	4.7K	5%	1/10W	(MDP-515D)
R349	1-216-065-00	METAL GLAZE	4.7K	5%	1/10W	(MDP-515D)
R350	1-216-047-00	METAL GLAZE	820	5%	1/10W	(MDP-515D)
R351	1-216-037-00	METAL GLAZE	330	5%	1/10W	(MDP-515D)
R352	1-249-405-11	CARBON	100	5%	1/4W	(MDP-515D)
R353	1-216-049-00	METAL GLAZE	1K	5%	1/10W	
R354	1-216-033-00	METAL GLAZE	220	5%	1/10W	
R355	1-216-033-00	METAL GLAZE	220	5%	1/10W	
R356	1-216-295-00	METAL GLAZE	0	5%	1/10W	
R357	1-216-073-00	METAL GLAZE	10K	5%	1/10W	
R358	1-216-073-00	METAL GLAZE	10K	5%	1/10W	
R359	1-216-041-00	METAL GLAZE	470	5%	1/10W	
R360	1-216-049-00	METAL GLAZE	1K	5%	1/10W	
R361	1-216-041-00	METAL GLAZE	470	5%	1/10W	
R362	1-216-063-00	METAL GLAZE	3.9K	5%	1/10W	
R601	1-216-049-00	METAL GLAZE	1K	5%	1/10W	
R602	1-216-049-00	METAL GLAZE	1K	5%	1/10W	
R603	1-216-049-00	METAL GLAZE	1K	5%	1/10W	
R604	1-216-037-00	METAL GLAZE	330	5%	1/10W	
R605	1-216-049-00	METAL GLAZE	1K	5%	1/10W	

When indicating parts by reference number, please include the board name.

www.hiflengine.com

MP-15

Ref.No	Part No.	Description				Remark
R606	1-216-049-00	METAL GLAZE	1K	5%	1/10W	
R607	1-216-033-00	METAL GLAZE	220	5%	1/10W	
R608	1-216-037-00	METAL GLAZE	330	5%	1/10W	
R609	1-216-033-00	METAL GLAZE	220	5%	1/10W	
R610	1-216-049-00	METAL GLAZE	1K	5%	1/10W	
R611	1-216-049-00	METAL GLAZE	1K	5%	1/10W	
R612	1-216-049-00	METAL GLAZE	1K	5%	1/10W	
R613	1-216-049-00	METAL GLAZE	1K	5%	1/10W (MDP-515D)	
R614	1-216-097-00	METAL GLAZE	100K	5%	1/10W (MDP-515D)	
R615	1-216-073-00	METAL GLAZE	10K	5%	1/10W	
R616	1-216-085-00	METAL GLAZE	33K	5%	1/10W	
R617	1-216-089-00	METAL GLAZE	47K	5%	1/10W	
R618	1-216-041-00	METAL GLAZE	470	5%	1/10W	
R619	1-216-097-00	METAL GLAZE	100K	5%	1/10W	
R620	1-216-049-00	METAL GLAZE	1K	5%	1/10W	
R621	1-216-049-00	METAL GLAZE	1K	5%	1/10W	
R622	1-216-049-00	METAL GLAZE	1K	5%	1/10W	
R623	1-216-055-00	METAL GLAZE	1.8K	5%	1/10W	
R624	1-216-063-00	METAL GLAZE	3.9K	5%	1/10W	
R625	1-216-069-00	METAL GLAZE	6.8K	5%	1/10W	
R626	1-216-095-00	METAL GLAZE	82K	5%	1/10W	
R627	1-216-081-00	METAL GLAZE	22K	5%	1/10W	
R628	1-216-065-00	METAL GLAZE	4.7K	5%	1/10W	
R629	1-216-081-00	METAL GLAZE	22K	5%	1/10W	
R630	1-216-101-00	METAL GLAZE	150K	5%	1/10W	
R631	1-216-025-00	METAL GLAZE	100	5%	1/10W	
R632	1-216-081-00	METAL GLAZE	22K	5%	1/10W	
R633	1-216-081-00	METAL GLAZE	22K	5%	1/10W	
R634	1-216-113-00	METAL GLAZE	470K	5%	1/10W	
R635	1-216-065-00	METAL GLAZE	4.7K	5%	1/10W	
R636	1-216-121-00	METAL GLAZE	1M	5%	1/10W	
R637	1-216-097-00	METAL GLAZE	100K	5%	1/10W	
R638	1-216-121-00	METAL GLAZE	1M	5%	1/10W	
R639	1-216-049-00	METAL GLAZE	1K	5%	1/10W	
R640	1-216-049-00	METAL GLAZE	1K	5%	1/10W	
R641	1-216-091-00	METAL GLAZE	56K	5%	1/10W	
R642	1-216-053-00	METAL GLAZE	1.5K	5%	1/10W	
R642	1-216-061-00	METAL GLAZE	3.3K	5%	1/10W	
R643	1-216-053-00	METAL GLAZE	1.5K	5%	1/10W	
R643	1-216-055-00	METAL GLAZE	1.8K	5%	1/10W	
R644	1-216-053-00	METAL GLAZE	1.5K	5%	1/10W	
R645	1-216-091-00	METAL GLAZE	56K	5%	1/10W	
R646	1-216-099-00	METAL GLAZE	120K	5%	1/10W	
R647	1-216-051-00	METAL GLAZE	1.2K	5%	1/10W	
R648	1-216-053-00	METAL GLAZE	1.5K	5%	1/10W	
R649	1-216-035-00	METAL GLAZE	270	5%	1/10W	
R650	1-216-033-00	METAL GLAZE	220	5%	1/10W	
R651	1-216-049-00	METAL GLAZE	1K	5%	1/10W	
R652	1-216-049-00	METAL GLAZE	1K	5%	1/10W	
R653	1-216-049-00	METAL GLAZE	1K	5%	1/10W	
R654	1-216-049-00	METAL GLAZE	1K	5%	1/10W	
R655	1-216-033-00	METAL GLAZE	220	5%	1/10W	
R656	1-216-033-00	METAL GLAZE	220	5%	1/10W	

Ref.No	Part No.	Description				Remark
R657	1-216-033-00	METAL GLAZE	220	5%	1/10W	
R658	1-216-033-00	METAL GLAZE	220	5%	1/10W	
R659	1-216-065-00	METAL GLAZE	4.7K	5%	1/10W	
R660	1-216-049-00	METAL GLAZE	1K	5%	1/10W	
R661	1-216-065-00	METAL GLAZE	4.7K	5%	1/10W	
R662	1-216-025-00	METAL GLAZE	100	5%	1/10W	
R663	1-216-049-00	METAL GLAZE	1K	5%	1/10W	
R664	1-216-033-00	METAL GLAZE	220	5%	1/10W	
R665	1-216-033-00	METAL GLAZE	220	5%	1/10W	
R666	1-216-033-00	METAL GLAZE	220	5%	1/10W	
R667	1-216-033-00	METAL GLAZE	220	5%	1/10W	
R668	1-216-033-00	METAL GLAZE	220	5%	1/10W	
R669	1-216-089-00	METAL GLAZE	47K	5%	1/10W	
R670	1-216-651-11	METAL CHIP	1K	0.50%	1/10W	
R671	1-216-659-11	METAL CHIP	2.2K	0.50%	1/10W	
R672	1-216-667-11	METAL CHIP	4.7K	0.50%	1/10W	
R673	1-216-659-11	METAL CHIP	2.2K	0.50%	1/10W	
R674	1-216-651-11	METAL CHIP	1K	0.50%	1/10W	
R675	1-216-651-11	METAL CHIP	1K	0.50%	1/10W	
R676	1-216-625-11	METAL CHIP	82	0.50%	1/10W	
R677	1-216-645-11	METAL CHIP	560	0.50%	1/10W	
R678	1-216-081-00	METAL GLAZE	22K	5%	1/10W	
R679	1-216-675-11	METAL CHIP	10K	0.50%	1/10W	
R680	1-216-697-11	METAL CHIP	82K	0.50%	1/10W	
R681	1-247-731-11	CARBON	22	5%	1/2W	
R682	1-216-097-00	METAL GLAZE	100K	5%	1/10W	
R683	1-216-049-00	METAL GLAZE	1K	5%	1/10W	
R684	1-216-073-00	METAL GLAZE	10K	5%	1/10W	
R685	1-216-099-00	METAL GLAZE	120K	5%	1/10W	
R686	1-216-075-00	METAL GLAZE	12K	5%	1/10W	
R687	1-216-043-00	METAL GLAZE	560	5%	1/10W	
R688	1-216-073-00	METAL GLAZE	10K	5%	1/10W	
R689	1-216-049-00	METAL GLAZE	1K	5%	1/10W	
R690	1-216-073-00	METAL GLAZE	10K	5%	1/10W	
R691	1-216-049-00	METAL GLAZE	1K	5%	1/10W	
R692	1-216-013-00	METAL GLAZE	33	5%	1/10W	
R693	1-216-081-00	METAL GLAZE	22K	5%	1/10W	
R694	1-216-121-00	METAL GLAZE	1M	5%	1/10W	
R695	1-216-057-00	METAL GLAZE	2.2K	5%	1/10W	
R696	1-216-093-00	METAL GLAZE	68K	5%	1/10W	
R697	1-216-085-00	METAL GLAZE	33K	5%	1/10W	
R698	1-216-097-00	METAL GLAZE	100K	5%	1/10W	
R699	1-216-085-00	METAL GLAZE	33K	5%	1/10W	
R700	1-216-077-00	METAL GLAZE	15K	5%	1/10W	
R701	1-216-105-00	METAL GLAZE	220K	5%	1/10W	
R702	1-216-083-00	METAL GLAZE	27K	5%	1/10W	
R703	1-216-073-00	METAL GLAZE	10K	5%	1/10W	
R704	1-216-111-00	METAL GLAZE	390K	5%	1/10W	
R705	1-216-077-00	METAL GLAZE	15K	5%	1/10W	
R706	1-216-105-00	METAL GLAZE	220K	5%	1/10W	
R707	1-216-075-00	METAL GLAZE	12K	5%	1/10W	
R708	1-216-035-00	METAL GLAZE	270	5%	1/10W	
R709	1-216-111-00	METAL GLAZE	390K	5%	1/10W	

When indicating parts by reference number, please include the board name.

www.hifiengine.com

Ref.No	Part No.	Description				Remark
R710	1-216-089-00	METAL GLAZE	47K	5%	1/10W	
R711	1-216-111-00	METAL GLAZE	390K	5%	1/10W	
R712	1-216-105-00	METAL GLAZE	220K	5%	1/10W	
R713	1-216-748-11	METAL GLAZE	39K	5%	1/10W	
R714	1-216-095-00	METAL GLAZE	82K	5%	1/10W	
R715	1-216-099-00	METAL GLAZE	120K	5%	1/10W	
R716	1-216-111-00	METAL GLAZE	390K	5%	1/10W	
R717	1-216-089-00	METAL GLAZE	47K	5%	1/10W	
R718	1-216-049-00	METAL GLAZE	1K	5%	1/10W	
R719	1-216-041-00	METAL GLAZE	470	5%	1/10W	
R720	1-216-033-00	METAL GLAZE	220	5%	1/10W	
R721	1-216-043-00	METAL GLAZE	560	5%	1/10W	
R722	1-216-049-00	METAL GLAZE	1K	5%	1/10W	
R723	1-216-073-00	METAL GLAZE	10K	5%	1/10W	
R724	1-216-073-00	METAL GLAZE	10K	5%	1/10W	
R725	1-216-073-00	METAL GLAZE	10K	5%	1/10W	
R726	1-216-073-00	METAL GLAZE	10K	5%	1/10W	
R727	1-216-073-00	METAL GLAZE	10K	5%	1/10W	
R728	1-216-033-00	METAL GLAZE	220	5%	1/10W	
R729	1-216-049-00	METAL GLAZE	1K	5%	1/10W	
R731	1-216-033-00	METAL GLAZE	220	5%	1/10W	
R732	1-216-033-00	METAL GLAZE	220	5%	1/10W	
R733	1-216-033-00	METAL GLAZE	220	5%	1/10W	
R734	1-216-057-00	METAL GLAZE	2.2K	5%	1/10W	
R735	1-216-081-00	METAL GLAZE	22K	5%	1/10W	
R736	1-216-081-00	METAL GLAZE	22K	5%	1/10W	
R737	1-216-065-00	METAL GLAZE	4.7K	5%	1/10W	
R738	1-216-081-00	METAL GLAZE	22K	5%	1/10W	
R739	1-216-057-00	METAL GLAZE	2.2K	5%	1/10W	
R740	1-216-021-00	METAL GLAZE	68	5%	1/10W	
R741 ⚠	1-212-950-00	FUSIBLE	4.7	5%	1/2W	F
R742	1-216-057-00	METAL GLAZE	2.2K	5%	1/10W	
R743	1-216-057-00	METAL GLAZE	2.2K	5%	1/10W	
R744	1-216-057-00	METAL GLAZE	2.2K	5%	1/10W	
R745	1-216-013-00	METAL GLAZE	33	5%	1/10W	
R746	1-216-101-00	METAL GLAZE	150K	5%	1/10W	
R747	1-216-675-11	METAL CHIP	10K	0.50%	1/10W	
R748	1-216-683-11	METAL CHIP	22K	0.50%	1/10W	
R749	1-216-071-00	METAL GLAZE	8.2K	5%	1/10W	
R750	1-216-059-00	METAL GLAZE	2.7K	5%	1/10W	
R751	1-216-113-00	METAL GLAZE	470K	5%	1/10W	
R752	1-216-053-00	METAL GLAZE	1.5K	5%	1/10W	
R753	1-216-085-00	METAL GLAZE	33K	5%	1/10W	
R754	1-216-073-00	METAL GLAZE	10K	5%	1/10W	
R755	1-216-061-00	METAL GLAZE	3.3K	5%	1/10W	
R756	1-216-073-00	METAL GLAZE	10K	5%	1/10W	
R757	1-216-089-00	METAL GLAZE	47K	5%	1/10W	
R760	1-216-047-00	METAL GLAZE	820	5%	1/10W	
R761	1-216-057-00	METAL GLAZE	2.2K	5%	1/10W	
R801	1-216-073-00	METAL GLAZE	10K	5%	1/10W	
R802	1-216-073-00	METAL GLAZE	10K	5%	1/10W	
R803	1-216-065-00	METAL GLAZE	4.7K	5%	1/10W	
R804	1-216-073-00	METAL GLAZE	10K	5%	1/10W	

Ref.No	Part No.	Description				Remark
R805	1-216-073-00	METAL GLAZE	10K	5%	1/10W	
R806	1-216-099-00	METAL GLAZE	120K	5%	1/10W	
R807	1-216-101-00	METAL GLAZE	150K	5%	1/10W	
R808	1-216-057-00	METAL GLAZE	2.2K	5%	1/10W	
R809	1-216-049-00	METAL GLAZE	1K	5%	1/10W	
R810	1-216-093-00	METAL GLAZE	68K	5%	1/10W	
R811	1-216-121-00	METAL GLAZE	1M	5%	1/10W	
R812	1-216-061-00	METAL GLAZE	3.3K	5%	1/10W	
R813	1-216-073-00	METAL GLAZE	10K	5%	1/10W	
R814	1-216-073-00	METAL GLAZE	10K	5%	1/10W	
R815	1-216-093-00	METAL GLAZE	68K	5%	1/10W	
R816	1-216-062-00	METAL GLAZE	3.6K	5%	1/10W	
R817	1-216-093-00	METAL GLAZE	68K	5%	1/10W	
R818	1-216-099-00	METAL GLAZE	120K	5%	1/10W	
R819	1-216-099-00	METAL GLAZE	120K	5%	1/10W	
R820	1-216-097-00	METAL GLAZE	100K	5%	1/10W	
R821	1-216-097-00	METAL GLAZE	100K	5%	1/10W	
R822	1-216-097-00	METAL GLAZE	100K	5%	1/10W	
R823	1-216-051-00	METAL GLAZE	1.2K	5%	1/10W	
R825	1-216-097-00	METAL GLAZE	100K	5%	1/10W	
R826	1-216-077-00	METAL GLAZE	15K	5%	1/10W	
R827	1-216-053-00	METAL GLAZE	1.5K	5%	1/10W	
R828	1-216-334-11	METAL GLAZE	22K	1%	1/10W	
R829	1-216-334-11	METAL GLAZE	22K	1%	1/10W	
R830	1-216-073-00	METAL GLAZE	10K	5%	1/10W	
R831	1-216-075-00	METAL GLAZE	12K	5%	1/10W	
R832	1-216-097-00	METAL GLAZE	100K	5%	1/10W	
R833	1-216-049-00	METAL GLAZE	1K	5%	1/10W	
R834	1-216-097-00	METAL GLAZE	100K	5%	1/10W	
R835	1-216-097-00	METAL GLAZE	100K	5%	1/10W	
R836	1-216-097-00	METAL GLAZE	100K	5%	1/10W	
R840	1-216-073-00	METAL GLAZE	10K	5%	1/10W	
R841	1-216-049-00	METAL GLAZE	1K	5%	1/10W	
R842	1-216-049-00	METAL GLAZE	1K	5%	1/10W	
R844	1-216-025-00	METAL GLAZE	100	5%	1/10W	
R845	1-216-025-00	METAL GLAZE	100	5%	1/10W	
R846	1-216-025-00	METAL GLAZE	100	5%	1/10W	
R847	1-216-025-00	METAL GLAZE	100	5%	1/10W	
R848	1-216-049-00	METAL GLAZE	1K	5%	1/10W	
R849	1-216-049-00	METAL GLAZE	1K	5%	1/10W	
R850	1-216-121-00	METAL GLAZE	1M	5%	1/10W	
R851	1-216-099-00	METAL GLAZE	120K	5%	1/10W	
R861	1-216-025-00	METAL GLAZE	100	5%	1/10W	
R862	1-216-025-00	METAL GLAZE	100	5%	1/10W	
R863	1-216-025-00	METAL GLAZE	100	5%	1/10W	
R864	1-216-025-00	METAL GLAZE	100	5%	1/10W	
R865	1-216-025-00	METAL GLAZE	100	5%	1/10W	
R868	1-216-073-00	METAL GLAZE	10K	5%	1/10W	
R901	1-216-049-00	METAL GLAZE	1K	5%	1/10W	
R903	1-216-049-00	METAL GLAZE	1K	5%	1/10W	
R909	1-259-178-81	CARBON	3K	1%	1/4W	
R910	1-259-171-91	CARBON	1.5K	5%	1/4W	
R911	1-259-171-91	CARBON	1.5K	5%	1/4W	

When indicating parts by reference number, please include the board name.

Note: The components identified by mark ⚠ or dotted line with mark ⚠ are critical for safety. Replace only with part number specified.

www.hifiengine.com

Ref.No	Part No.	Description				Remark
R912	1-259-223-91	CARBON	220K	5%	1/4W	
R913	1-259-178-81	CARBON	3K	1%	1/4W	
R914	1-259-171-91	CARBON	1.5K	5%	1/4W	
R915	1-259-171-91	CARBON	1.5K	5%	1/4W	
R916	1-259-223-91	CARBON	220K	5%	1/4W	
R917	1-216-049-00	METAL GLAZE	1K	5%	1/10W	
R920 ⚠	1-212-849-00	FUSIBLE	4.7	5%	1/4W	F
R921 ⚠	1-212-849-00	FUSIBLE	4.7	5%	1/4W	F
R922	1-216-073-00	METAL GLAZE	10K	5%	1/10W	
R924	1-216-077-00	METAL GLAZE	15K	5%	1/10W	
R925	1-216-057-00	METAL GLAZE	2.2K	5%	1/10W	
R926	1-216-081-00	METAL GLAZE	22K	5%	1/10W	
R927	1-216-081-00	METAL GLAZE	22K	5%	1/10W	
R928	1-259-151-91	CARBON	220	5%	1/4W	
R929	1-259-151-91	CARBON	220	5%	1/4W	
R930	1-259-215-91	CARBON	100K	5%	1/4W	
R931	1-259-215-91	CARBON	100K	5%	1/4W	
R932	1-259-167-91	CARBON	1K	5%	1/4W	
R933	1-216-061-00	METAL GLAZE	3.3K	5%	1/10W	
R934	1-216-061-00	METAL GLAZE	3.3K	5%	1/10W	
R935	1-259-167-91	CARBON	1K	5%	1/4W	
R936	1-216-060-00	METAL GLAZE	3K	5%	1/10W	
R937	1-216-049-00	METAL GLAZE	1K	5%	1/10W	
R938	1-216-049-00	METAL GLAZE	1K	5%	1/10W	
R939	1-259-191-91	CARBON	10K	5%	1/4W	
R940	1-259-191-91	CARBON	10K	5%	1/4W	
R941	1-216-049-00	METAL GLAZE	1K	5%	1/10W	
R942	1-216-049-00	METAL GLAZE	1K	5%	1/10W	
R945	1-216-061-00	METAL GLAZE	3.3K	5%	1/10W	
R946	1-216-073-00	METAL GLAZE	10K	5%	1/10W	
R947	1-216-073-00	METAL GLAZE	10K	5%	1/10W	
R951	1-216-025-00	METAL GLAZE	100	5%	1/10W	
R952	1-216-025-00	METAL GLAZE	100	5%	1/10W	
R953	1-216-049-00	METAL GLAZE	1K	5%	1/10W	
R954	1-216-049-00	METAL GLAZE	1K	5%	1/10W	

VARIABLE RESISTOR

RV101	1-228-989-00	RES, ADJ, CARBON 470
RV102	1-228-989-00	RES, ADJ, CARBON 470
RV103	1-228-993-00	RES, ADJ, CARBON 4.7K
RV104	1-228-994-00	RES, ADJ, CARBON 10K
RV105	1-228-993-00	RES, ADJ, CARBON 4.7K
RV106	1-228-998-00	RES, ADJ, METAL GLAZE 220K
RV107	1-228-994-00	RES, ADJ, CARBON 10K
RV801	1-228-993-00	RES, ADJ, CARBON 4.7K

RELAY

RY801	1-515-622-11	RELAY

CRYSTAL

X101	1-567-652-11	VIBRATOR, CRYSTAL
X601	1-567-733-11	VIBRATOR, CRYSTAL
X602	1-567-900-11	VIBRATOR, CRYSTAL
X801	1-567-515-11	VIBRATOR, VARIABLE CRYSTAL

****

*A-6421-371-A AF-52 BOARD, COMPLETE (Ref.No 8,000 Series)
****

CAPACITOR

Ref.No	Part No.	Description				Remark
C401	1-126-177-11	ELECT	100MF	20%	6.3V	(MDP-515D)
C402	1-164-232-11	CERAMIC CHIP	0.01MF	10%	50V	(MDP-515D)
C403	1-163-126-00	CERAMIC CHIP	240PF	5%	50V	(MDP-515D)
C404	1-163-126-00	CERAMIC CHIP	240PF	5%	50V	(MDP-515D)
C405	1-163-101-00	CERAMIC CHIP	22PF	5%	50V	(MDP-515D)
C406	1-163-099-00	CERAMIC CHIP	18PF	5%	50V	(MDP-515D)
C407	1-163-111-00	CERAMIC CHIP	56PF	5%	50V	(MDP-515D)
C408	1-163-099-00	CERAMIC CHIP	18PF	5%	50V	(MDP-515D)
C409	1-163-101-00	CERAMIC CHIP	22PF	5%	50V	(MDP-515D)
C410	1-164-232-11	CERAMIC CHIP	0.01MF	10%	50V	(MDP-515D)
C411	1-164-232-11	CERAMIC CHIP	0.01MF	10%	50V	(MDP-515D)
C412	1-124-446-11	ELECT	47MF	20%	10V	(MDP-515D)
C413	1-164-232-11	CERAMIC CHIP	0.01MF	10%	50V	(MDP-515D)
C414	1-124-446-11	ELECT	47MF	20%	10V	(MDP-515D)
C415	1-163-809-11	CERAMIC CHIP	0.047MF	10%	25V	(MDP-515D)
C416	1-163-809-11	CERAMIC CHIP	0.047MF	10%	25V	(MDP-515D)
C417	1-126-177-11	ELECT	100MF	20%	6.3V	(MDP-515D)
C418	1-164-232-11	CERAMIC CHIP	0.01MF	10%	50V	(MDP-515D)
C419	1-163-121-00	CERAMIC CHIP	150PF	5%	50V	(MDP-515D)
C420	1-163-129-00	CERAMIC CHIP	330PF	5%	50V	(MDP-515D)
C421	1-163-121-00	CERAMIC CHIP	150PF	5%	50V	(MDP-515D)
C422	1-164-232-11	CERAMIC CHIP	0.01MF	10%	50V	(MDP-515D)
C423	1-164-232-11	CERAMIC CHIP	0.01MF	10%	50V	(MDP-515D)
C424	1-124-446-11	ELECT	47MF	20%	10V	(MDP-515D)
C425	1-164-232-11	CERAMIC CHIP	0.01MF	10%	50V	(MDP-515D)
C426	1-124-446-11	ELECT	47MF	20%	10V	(MDP-515D)
C427	1-163-809-11	CERAMIC CHIP	0.047MF	10%	25V	(MDP-515D)
C428	1-163-809-11	CERAMIC CHIP	0.047MF	10%	25V	(MDP-515D)
C429	1-164-161-11	CERAMIC CHIP	0.0022MF	10%	50V	(MDP-515D)
C715	1-163-809-11	CERAMIC CHIP	0.047MF	10%	25V	
C716	1-163-141-00	CERAMIC CHIP	0.001MF	5%	50V	
C717	1-124-443-00	ELECT	100MF	20%	6.3V	
C718	1-164-161-11	CERAMIC CHIP	0.0022MF	10%	50V	
C719	1-124-443-00	ELECT	100MF	20%	6.3V	
C720	1-126-233-11	ELECT	22MF	20%	25V	
C721	1-163-105-00	CERAMIC CHIP	33PF	5%	50V	(MDP-515D)
C721	1-216-295-00	METAL GLAZE	0	5%	1/10W	(MDP-315)
C722	1-163-145-00	CERAMIC CHIP	0.0015MF	5%	50V	
C723	1-163-125-00	CERAMIC CHIP	220PF	5%	50V	
C724	1-163-019-00	CERAMIC CHIP	0.0068MF	10%	50V	
C725	1-163-145-00	CERAMIC CHIP	0.0015MF	5%	50V	
C726	1-126-233-11	ELECT	22MF	20%	25V	
C727	1-124-443-00	ELECT	100MF	20%	6.3V	
C728	1-163-017-00	CERAMIC CHIP	0.0047MF	10%	50V	
C729	1-163-145-00	CERAMIC CHIP	0.0015MF	5%	50V	

When indicating parts by reference number, please include the board name.

Note: The components identified by mark ⚠ or dotted line with mark ⚠ are critical for safety. Replace only with part number specified.

www.hifiengine.com

Ref.No	Part No.	Description			Remark
C730	1-163-129-00	CERAMIC CHIP 330PF	5%	50V	
C731	1-163-125-00	CERAMIC CHIP 220PF	5%	50V	
C732	1-163-020-00	CERAMIC CHIP 0.0082MF	5%	50V	
C733	1-123-875-11	ELECT 10MF	20%	50V	
C734	1-163-809-11	CERAMIC CHIP 0.047MF	5%	25V	
C735	1-163-077-00	CERAMIC CHIP 0.1MF	10%	25V	
C736	1-126-233-11	ELECT 22MF	20%	25V	
C737	1-163-141-00	CERAMIC CHIP 0.001MF	5%	50V	
C738	1-163-809-11	CERAMIC CHIP 0.047MF	10%	25V	
C739	1-124-443-00	ELECT 100MF	20%	6.3V	
C740	1-164-161-11	CERAMIC CHIP 0.0022MF	10%	50V	
C741	1-126-233-11	ELECT 22MF	20%	25V	
C742	1-124-443-00	ELECT 100MF	20%	6.3V	
C743	1-163-117-00	CERAMIC CHIP 100PF	5%	50V	
C744	1-163-125-00	CERAMIC CHIP 220PF	5%	50V	
C745	1-163-145-00	CERAMIC CHIP 0.0015MF	5%	50V	
C746	1-163-145-00	CERAMIC CHIP 0.0015MF	5%	50V	
C747	1-163-019-00	CERAMIC CHIP 0.0068MF	10%	50V	
C748	1-126-233-11	ELECT 22MF	20%	25V	
C749	1-163-017-00	CERAMIC CHIP 0.0047MF	10%	50V	
C750	1-163-129-00	CERAMIC CHIP 330PF	5%	50V	
C751	1-163-145-00	CERAMIC CHIP 0.0015MF	5%	50V	
C752	1-163-125-00	CERAMIC CHIP 220PF	5%	50V	
C753	1-163-020-00	CERAMIC CHIP 0.0082MF	5%	50V	
C754	1-123-875-11	ELECT 10MF	20%	50V	
C755	1-163-809-11	CERAMIC CHIP 0.047MF	5%	25V	
C756	1-124-270-11	ELECT 0.47MF	20%	50V	
C757	1-124-443-00	ELECT 100MF	20%	6.3V	
C758	1-124-927-11	ELECT 4.7MF	20%	50V	
C759	1-216-295-00	METAL GLAZE 0	5%	1/10W	(MDP-315)
C759	1-163-105-00	CERAMIC CHIP 33PF	5%	50V	(MDP-515D)
C760	1-163-141-00	CERAMIC CHIP 0.001MF	5%	50V	
C761	1-163-113-00	CERAMIC CHIP 68PF	5%	50V	
C762	1-124-446-11	ELECT 47MF	20%	10V	
C763	1-124-446-11	ELECT 47MF	20%	10V	
C764	1-163-116-00	CERAMIC CHIP 91PF	5%	50V	
C765	1-163-113-00	CERAMIC CHIP 68PF	5%	50V	
C766	1-124-446-11	ELECT 47MF	20%	10V	(MDP-515D)

CONNECTOR

CN701	*1-566-709-11	CONNECTOR, BOARD TO BOARD 12P

FILTER

FL401	1-235-925-11	FILTER, BAND PASS (2.3MHZ) (MDP-515D)
FL402	1-235-926-11	FILTER, BAND PASS (2.8MHZ) (MDP-515D)
FL403	1-236-573-11	BPF (PAL LCH) (0.68MHz)
FL404	1-236-574-11	BPF (PAL LCH) (1.07MHz)

IC

IC401	8-759-941-68	IC BA7131F (MDP-515D)
IC402	8-759-941-68	IC BA7131F (MDP-515D)
IC701	8-759-321-46	IC HA12127NT

Ref.No	Part No.	Description				Remark

JUMPER RESISTOR

JR1	1-216-295-00	METAL GLAZE	0	5%	1/10W
JR2	1-216-295-00	METAL GLAZE	0	5%	1/10W
JR3	1-216-295-00	METAL GLAZE	0	5%	1/10W
JR4	1-216-295-00	METAL GLAZE	0	5%	1/10W
JR5	1-216-295-00	METAL GLAZE	0	5%	1/10W
JR6	1-216-295-00	METAL GLAZE	0	5%	1/10W
JR7	1-216-295-00	METAL GLAZE	0	5%	1/10W
JR8	1-216-295-00	METAL GLAZE	0	5%	1/10W
JR9	1-216-295-00	METAL GLAZE	0	5%	1/10W
JR10	1-216-295-00	METAL GLAZE	0	5%	1/10W
JR11	1-216-295-00	METAL GLAZE	0	5%	1/10W
JR12	1-216-295-00	METAL GLAZE	0	5%	1/10W
JR13	1-216-295-00	METAL GLAZE	0	5%	1/10W
JR14	1-216-295-00	METAL GLAZE	0	5%	1/10W
JR15	1-216-295-00	METAL GLAZE	0	5%	1/10W
JR16	1-216-295-00	METAL GLAZE	0	5%	1/10W
JR17	1-216-295-00	METAL GLAZE	0	5%	1/10W
JR18	1-216-295-00	METAL GLAZE	0	5%	1/10W
JR19	1-216-295-00	METAL GLAZE	0	5%	1/10W
JR20	1-216-295-00	METAL GLAZE	0	5%	1/10W
JR21	1-216-295-00	METAL GLAZE	0	5%	1/10W
JR23	1-216-295-00	METAL GLAZE	0	5%	1/10W
JR24	1-216-295-00	METAL GLAZE	0	5%	1/10W
JR25	1-216-295-00	METAL GLAZE	0	5%	1/10W
JR26	1-216-295-00	METAL GLAZE	0	5%	1/10W
JR27	1-216-295-00	METAL GLAZE	0	5%	1/10W
JR28	1-216-295-00	METAL GLAZE	0	5%	1/10W
JR29	1-216-295-00	METAL GLAZE	0	5%	1/10W

COIL

L401	1-410-521-11	INDUCTOR	100UH (MDP-515D)
L402	1-410-336-11	INDUCTOR	220UH (MDP-515D)
L403	1-408-417-00	INDUCTOR	47UH (MDP-515D)
L404	1-408-417-00	INDUCTOR	47UH (MDP-515D)
L405	1-410-520-11	INDUCTOR	82UH
L406	1-410-520-11	INDUCTOR	82UH
L705	1-408-420-00	INDUCTOR	82UH
L706	1-408-420-00	INDUCTOR	82UH
L707	1-408-407-00	INDUCTOR	6.8UH
L708	1-408-407-00	INDUCTOR	6.8UH

TRANSISTOR

Q401	8-729-100-66	TRANSISTOR 2SC1623 (MDP-515D)
Q402	8-729-100-66	TRANSISTOR 2SC1623 (MDP-515D)
Q403	8-729-100-66	TRANSISTOR 2SC1623 (MDP-515D)
Q404	8-729-100-66	TRANSISTOR 2SC1623 (MDP-515D)
Q405	8-729-100-66	TRANSISTOR 2SC1623 (MDP-515D)
Q406	8-729-100-66	TRANSISTOR 2SC1623 (MDP-515D)
Q407	8-729-100-66	TRANSISTOR 2SC1623
Q408	8-729-100-66	TRANSISTOR 2SC1623
Q409	8-729-100-66	TRANSISTOR 2SC1623
Q410	8-729-100-66	TRANSISTOR 2SC1623

When indicating parts by reference number, please include the board name.

www.hifiengine.com

AF-52

Ref.No	Part No.	Description	Remark
Q411	8-729-100-66	TRANSISTOR 2SC1623	
Q412	8-729-100-66	TRANSISTOR 2SC1623	
Q701	8-729-808-36	TRANSISTOR 2SK669 (MDP-515D)	
Q702	8-729-808-36	TRANSISTOR 2SK669 (MDP-515D)	
Q703	8-729-901-01	TRANSISTOR DTC144EK	
Q704	8-729-901-06	TRANSISTOR DTA144EK	
Q705	8-729-220-93	TRANSISTOR 2SK209G (MDP-515D)	
Q706	8-729-220-93	TRANSISTOR 2SK209G (MDP-515D)	
		RESISTOR	
R401	1-216-073-00	METAL GLAZE 10K 5% 1/10W (MDP-515D)	
R402	1-216-053-00	METAL GLAZE 1.5K 5% 1/10W (MDP-515D)	
R403	1-216-053-00	METAL GLAZE 1.5K 5% 1/10W (MDP-515D)	
R404	1-216-033-00	METAL GLAZE 220 5% 1/10W (MDP-515D)	
R405	1-216-048-00	METAL GLAZE 910 5% 1/10W (MDP-515D)	
R406	1-216-081-00	METAL GLAZE 22K 5% 1/10W (MDP-515D)	
R407	1-216-081-00	METAL GLAZE 22K 5% 1/10W (MDP-515D)	
R408	1-216-049-00	METAL GLAZE 1K 5% 1/10W (MDP-515D)	
R409	1-216-049-00	METAL GLAZE 1K 5% 1/10W (MDP-515D)	
R410	1-216-049-00	METAL GLAZE 1K 5% 1/10W (MDP-515D)	
R411	1-216-049-00	METAL GLAZE 1K 5% 1/10W (MDP-515D)	
R412	1-216-067-00	METAL GLAZE 5.6K 5% 1/10W (MDP-515D)	
R413	1-216-075-00	METAL GLAZE 12K 5% 1/10W (MDP-515D)	
R414	1-216-059-00	METAL GLAZE 2.7K 5% 1/10W (MDP-515D)	
R415	1-216-049-00	METAL GLAZE 1K 5% 1/10W (MDP-515D)	
R416	1-216-049-00	METAL GLAZE 1K 5% 1/10W (MDP-515D)	
R417	1-216-049-00	METAL GLAZE 1K 5% 1/10W (MDP-515D)	
R418	1-216-067-00	METAL GLAZE 5.6K 5% 1/10W (MDP-515D)	
R419	1-216-075-00	METAL GLAZE 12K 5% 1/10W (MDP-515D)	
R420	1-216-059-00	METAL GLAZE 2.7K 5% 1/10W (MDP-515D)	
R421	1-216-073-00	METAL GLAZE 10K 5% 1/10W (MDP-515D)	
R422	1-216-053-00	METAL GLAZE 1.5K 5% 1/10W (MDP-515D)	
R423	1-216-053-00	METAL GLAZE 1.5K 5% 1/10W (MDP-515D)	
R424	1-216-033-00	METAL GLAZE 220 5% 1/10W (MDP-515D)	
R425	1-216-045-00	METAL GLAZE 680 5% 1/10W (MDP-515D)	
R426	1-216-081-00	METAL GLAZE 22K 5% 1/10W (MDP-515D)	
R427	1-216-081-00	METAL GLAZE 22K 5% 1/10W (MDP-515D)	
R428	1-216-049-00	METAL GLAZE 1K 5% 1/10W (MDP-515D)	
R429	1-216-049-00	METAL GLAZE 1K 5% 1/10W (MDP-515D)	
R430	1-216-049-00	METAL GLAZE 1K 5% 1/10W (MDP-515D)	
R431	1-216-049-00	METAL GLAZE 1K 5% 1/10W (MDP-515D)	
R432	1-216-067-00	METAL GLAZE 5.6K 5% 1/10W (MDP-515D)	
R433	1-216-075-00	METAL GLAZE 12K 5% 1/10W (MDP-515D)	
R434	1-216-059-00	METAL GLAZE 2.7K 5% 1/10W (MDP-515D)	
R435	1-216-049-00	METAL GLAZE 1K 5% 1/10W (MDP-515D)	
R436	1-216-049-00	METAL GLAZE 1K 5% 1/10W (MDP-515D)	
R437	1-216-049-00	METAL GLAZE 1K 5% 1/10W (MDP-515D)	
R438	1-216-067-00	METAL GLAZE 5.6K 5% 1/10W (MDP-515D)	
R439	1-216-075-00	METAL GLAZE 12K 5% 1/10W (MDP-515D)	
R440	1-216-059-00	METAL GLAZE 2.7K 5% 1/10W (MDP-515D)	
R719	1-216-049-00	METAL GLAZE 1K 5% 1/10W	
R720	1-216-060-00	METAL GLAZE 3K 5% 1/10W	
R721	1-216-063-00	METAL GLAZE 3.9K 5% 1/10W	

Ref.No	Part No.	Description	Remark
R722	1-216-075-00	METAL GLAZE 12K 5% 1/10W	
R723	1-216-085-00	METAL GLAZE 33K 5% 1/10W	
R724	1-216-065-00	METAL GLAZE 4.7K 5% 1/10W	
R725	1-216-051-00	METAL GLAZE 1.2K 5% 1/10W	
R726	1-216-051-00	METAL GLAZE 1.2K 5% 1/10W	
R727	1-216-065-00	METAL GLAZE 4.7K 5% 1/10W	
R728	1-216-097-00	METAL GLAZE 100K 5% 1/10W	
R729	1-216-049-00	METAL GLAZE 1K 5% 1/10W	
R730	1-216-049-00	METAL GLAZE 1K 5% 1/10W	
R731	1-216-073-00	METAL GLAZE 10K 5% 1/10W (MDP-515D)	
R731	1-216-085-00	METAL GLAZE 33K 5% 1/10W (MDP-315)	
R732	1-216-081-00	METAL GLAZE 22K 5% 1/10W (MDP-315)	
R732	1-216-748-11	METAL GLAZE 39K 5% 1/10W (MDP-515D)	
R733	1-216-069-00	METAL GLAZE 6.8K 5% 1/10W	
R734	1-216-101-00	METAL GLAZE 150K 5% 1/10W	
R735	1-216-101-00	METAL GLAZE 150K 5% 1/10W	
R736	1-216-096-00	METAL GLAZE 91K 5% 1/10W	
R737	1-216-089-00	METAL GLAZE 47K 5% 1/10W	
R738	1-216-057-00	METAL GLAZE 2.2K 5% 1/10W	
R739	1-216-049-00	METAL GLAZE 1K 5% 1/10W	
R740	1-216-049-00	METAL GLAZE 1K 5% 1/10W	
R741	1-216-060-00	METAL GLAZE 3K 5% 1/10W	
R742	1-216-075-00	METAL GLAZE 12K 5% 1/10W	
R743	1-216-692-11	METAL CHIP 51K 0.50% 1/10W	
R744	1-216-692-11	METAL CHIP 51K 0.50% 1/10W	
R745	1-216-064-00	METAL GLAZE 4.3K 5% 1/10W	
R746	1-216-065-00	METAL GLAZE 4.7K 5% 1/10W	
R747	1-216-051-00	METAL GLAZE 1.2K 5% 1/10W	
R748	1-216-051-00	METAL GLAZE 1.2K 5% 1/10W	
R749	1-216-065-00	METAL GLAZE 4.7K 5% 1/10W	
R750	1-216-097-00	METAL GLAZE 100K 5% 1/10W	
R751	1-216-073-00	METAL GLAZE 10K 5% 1/10W (MDP-515D)	
R751	1-216-085-00	METAL GLAZE 33K 5% 1/10W (MDP-315)	
R752	1-216-081-00	METAL GLAZE 22K 5% 1/10W (MDP-315)	
R752	1-216-748-11	METAL GLAZE 39K 5% 1/10W (MDP-515D)	
R753	1-216-069-00	METAL GLAZE 6.8K 5% 1/10W	
R754	1-216-063-00	METAL GLAZE 3.9K 5% 1/10W	
R757	1-216-073-00	METAL GLAZE 10K 5% 1/10W	
R758	1-216-057-00	METAL GLAZE 2.2K 5% 1/10W	
R759	1-216-121-00	METAL GLAZE 1M 5% 1/10W	
R760	1-216-121-00	METAL GLAZE 1M 5% 1/10W (MDP-515D)	
R761	1-216-121-00	METAL GLAZE 1M 5% 1/10W (MDP-515D)	
R762	1-216-121-00	METAL GLAZE 1M 5% 1/10W (MDP-515D)	
R763	1-216-089-00	METAL GLAZE 47K 5% 1/10W (MDP-515D)	
R764	1-216-057-00	METAL GLAZE 2.2K 5% 1/10W (MDP-515D)	
R765	1-216-121-00	METAL GLAZE 1M 5% 1/10W (MDP-515D)	
R766	1-216-121-00	METAL GLAZE 1M 5% 1/10W (MDP-515D)	
R767	1-216-121-00	METAL GLAZE 1M 5% 1/10W (MDP-515D)	
R769	1-216-077-00	METAL GLAZE 15K 5% 1/10W (MDP-515D)	
R770	1-216-069-00	METAL GLAZE 6.8K 5% 1/10W (MDP-515D)	
R771	1-216-069-00	METAL GLAZE 6.8K 5% 1/10W (MDP-515D)	
R772	1-216-121-00	METAL GLAZE 1M 5% 1/10W (MDP-515D)	
R773	1-216-121-00	METAL GLAZE 1M 5% 1/10W (MDP-515D)	

When indicating parts by reference number, please include the board name.

www.hifiengine.com

Ref.No	Part No.	Description	Remark
		VARIABLE RESISTOR	
RV701	1-228-995-00	RES, ADJ, CARBON 22K	
RV702	1-228-995-00	RES, ADJ, CARBON 22K	
RV703	1-228-996-00	RES, ADJ, CARBON 47K (MDP-515D)	
RV704	1-228-996-00	RES, ADJ, CARBON 47K (MDP-515D)	

****

*1-633-134-11 TL-40 BOARD (Ref. No 2,000 Series)
****

		RESISTOR			
R001	1-249-429-11	CARBON	10K	5%	1/4W
		VARIABLE RESISTOR			
RV001	1-228-994-00	RES, ADJ, CARBON 10K			

****

*A-6421-370-A RG-6 BOARD, COMPLETE (MDP-515D)
**********(Ref. No 2,000 Series)

		CAPACITOR			
C101	1-124-589-11	ELECT	47MF	20%	16V
C102	1-126-157-11	ELECT	10MF	20%	16V
C103	1-163-117-00	CERAMIC CHIP	100PF	5%	50V
C104	1-163-035-00	CERAMIC CHIP	0.047MF		50V
C105	1-126-157-11	ELECT	10MF	20%	16V
C106	1-163-035-00	CERAMIC CHIP	0.047MF		50V
C107	1-126-154-11	ELECT	47MF	20%	6.3V
C108	1-124-604-00	ELECT	330MF	20%	10V
C109	1-163-038-00	CERAMIC CHIP	0.1MF		25V
C110	1-126-154-11	ELECT	47MF	20%	6.3V
C111	1-126-157-11	ELECT	10MF	20%	16V
C112	1-163-117-00	CERAMIC CHIP	100PF	5%	50V
C113	1-163-113-00	CERAMIC CHIP	68PF	5%	50V
C114	1-126-157-11	ELECT	10MF	20%	16V
C115	1-163-035-00	CERAMIC CHIP	0.047MF		50V
C116	1-124-589-11	ELECT	47MF	20%	16V
C117	1-163-035-00	CERAMIC CHIP	0.047MF		50V
C118	1-163-035-00	CERAMIC CHIP	0.047MF		50V
C119	1-136-161-00	MYLAR	0.047MF	10%	50V
C120	1-136-161-00	MYLAR	0.047MF	10%	50V
C121	1-163-035-00	CERAMIC CHIP	0.047MF		50V
C122	1-163-035-00	CERAMIC CHIP	0.047MF		50V
C123	1-163-035-00	CERAMIC CHIP	0.047MF		50V
C124	1-163-035-00	CERAMIC CHIP	0.047MF		50V
C125	1-126-157-11	ELECT	10MF	20%	16V
C126	1-126-157-11	ELECT	10MF	20%	16V
C127	1-126-157-11	ELECT	10MF	20%	16V
C128	1-126-157-11	ELECT	10MF	20%	16V
C129	1-126-157-11	ELECT	10MF	20%	16V
C130	1-126-157-11	ELECT	10MF	20%	16V
C131	1-124-465-00	ELECT	0.47MF	20%	50V
C132	1-126-177-11	ELECT	100MF	20%	6.3V
C133	1-163-038-00	CERAMIC CHIP	0.1MF		25V
C134	1-163-035-00	CERAMIC CHIP	0.047MF		50V
C135	1-136-159-00	MYLAR	0.033MF	10%	50V
C136	1-124-438-00	ELECT	1MF	20%	50V
C137	1-163-035-00	CERAMIC CHIP	0.047MF		50V
C138	1-163-038-00	CERAMIC CHIP	0.1MF		25V
C139	1-163-101-00	CERAMIC CHIP	22PF	5%	50V
C140	1-163-105-00	CERAMIC CHIP	33PF	5%	50V
C141	1-163-099-00	CERAMIC CHIP	18PF	5%	50V
C142	1-124-472-11	ELECT	470MF	20%	6.3V
C143	1-126-177-11	ELECT	100MF	20%	6.3V
C144	1-163-097-00	CERAMIC CHIP	15PF	5%	50V
C145	1-163-103-00	CERAMIC CHIP	27PF	5%	50V
		CONNECTOR			
CN101	*1-566-709-11	CONNECTOR, BOARD TO BOARD 12P			
		TRIMMER			
CV102	1-141-227-00	CAP, CERAMIC TRIMMER			
		DIODE			
D101	8-719-911-19	DIODE 1SS119			
D102	8-719-911-19	DIODE 1SS119			
D103	8-719-911-19	DIODE 1SS119			
D104	8-719-911-19	DIODE 1SS119			
		DELAY LINE			
DL101	1-415-122-31	DELAY LINE, 1H (PAL)			
DL102	1-415-640-11	DELAY LINE, LC			
		FILTER			
FL101	1-235-753-21	YC MODULE			
FL102	1-235-896-11	FILTER, BAND PASS			
		IC			
IC101	8-752-006-12	IC CX20061			
IC102	8-752-006-12	IC CX20061			
IC103	8-752-030-75	IC V7020			
IC104	8-759-011-65	IC MC74HC4053F			
IC105	1-464-932-21	FILTER BLOCK, COM (CFB-3)			
		COIL			
L101	1-408-601-41	INDUCTOR	6.8UH		
L103	1-408-609-41	INDUCTOR	33UH		
L104	1-408-601-41	INDUCTOR	6.8UH		
L105	1-408-609-41	INDUCTOR	33UH		
		VARIABLE COIL			
LV101	1-415-651-11	COIL (DELAY ADJUSTMENT)			

When indicating parts by reference number, please include the board name.

www.hifiengine.com

RG-6

Ref.No	Part No.	Description	Remark
		TRANSISTOR	
Q101	8-729-100-66	TRANSISTOR 2SC1623	
Q102	8-729-100-66	TRANSISTOR 2SC1623	
Q103	8-729-100-66	TRANSISTOR 2SC1623	
Q104	8-729-100-66	TRANSISTOR 2SC1623	
Q105	8-729-100-66	TRANSISTOR 2SC1623	
Q106	8-729-100-66	TRANSISTOR 2SC1623	
Q107	8-729-100-66	TRANSISTOR 2SC1623	
Q108	8-729-216-22	TRANSISTOR 2SA1162	
Q109	8-729-100-66	TRANSISTOR 2SC1623	
Q110	8-729-100-66	TRANSISTOR 2SC1623	
Q111	8-729-901-06	TRANSISTOR DTA144EK	
Q112	8-729-901-01	TRANSISTOR DTC144EK	
Q113	8-729-901-01	TRANSISTOR DTC144EK	
Q114	8-729-100-66	TRANSISTOR 2SC1623	
Q115	8-729-216-22	TRANSISTOR 2SA1162	
Q116	8-729-100-66	TRANSISTOR 2SC1623	
Q117	8-729-100-66	TRANSISTOR 2SC1623	
Q118	8-729-216-22	TRANSISTOR 2SA1162	
Q119	8-729-100-66	TRANSISTOR 2SC1623	
Q120	8-729-100-66	TRANSISTOR 2SC1623	
Q121	8-729-216-22	TRANSISTOR 2SA1162	
Q122	8-729-100-66	TRANSISTOR 2SC1623	
Q123	8-729-901-01	TRANSISTOR DTC144EK	
		RESISTOR	
R101	1-216-073-00	METAL GLAZE 10K 5% 1/10W	
R102	1-216-085-00	METAL GLAZE 33K 5% 1/10W	
R103	1-216-063-00	METAL GLAZE 3.9K 5% 1/10W	
R104	1-216-041-00	METAL GLAZE 470 5% 1/10W	
R105	1-216-075-00	METAL GLAZE 12K 5% 1/10W	
R106	1-216-073-00	METAL GLAZE 10K 5% 1/10W	
R107	1-216-049-00	METAL GLAZE 1K 5% 1/10W	
R108	1-216-049-00	METAL GLAZE 1K 5% 1/10W	
R109	1-216-039-00	METAL GLAZE 390 5% 1/10W	
R110	1-216-055-00	METAL GLAZE 1.8K 5% 1/10W	
R111	1-216-073-00	METAL GLAZE 10K 5% 1/10W	
R112	1-216-073-00	METAL GLAZE 10K 5% 1/10W	
R113	1-216-061-00	METAL GLAZE 3.3K 5% 1/10W	
R114	1-216-073-00	METAL GLAZE 10K 5% 1/10W	
R115	1-216-073-00	METAL GLAZE 10K 5% 1/10W	
R116	1-216-055-00	METAL GLAZE 1.8K 5% 1/10W	
R117	1-216-049-00	METAL GLAZE 1K 5% 1/10W	
R118	1-216-051-00	METAL GLAZE 1.2K 5% 1/10W	
R119	1-216-077-00	METAL GLAZE 15K 5% 1/10W	
R120	1-216-075-00	METAL GLAZE 12K 5% 1/10W	
R121	1-216-049-00	METAL GLAZE 1K 5% 1/10W	
R122	1-216-049-00	METAL GLAZE 1K 5% 1/10W	
R123	1-216-047-00	METAL GLAZE 820 5% 1/10W	
R124	1-216-049-00	METAL GLAZE 1K 5% 1/10W	
R125	1-216-047-00	METAL GLAZE 820 5% 1/10W	
R126	1-216-065-00	METAL GLAZE 4.7K 5% 1/10W	

Ref.No	Part No.	Description	Remark
R127	1-216-059-00	METAL GLAZE 2.7K 5% 1/10W	
R128	1-216-045-00	METAL GLAZE 680 5% 1/10W	
R129	1-216-047-00	METAL GLAZE 820 5% 1/10W	
R130	1-216-073-00	METAL GLAZE 10K 5% 1/10W	
R131	1-216-071-00	METAL GLAZE 8.2K 5% 1/10W	
R132	1-216-059-00	METAL GLAZE 2.7K 5% 1/10W	
R133	1-216-111-00	METAL GLAZE 390K 5% 1/10W	
R134	1-216-103-00	METAL GLAZE 180K 5% 1/10W	
R135	1-216-047-00	METAL GLAZE 820 5% 1/10W	
R136	1-216-055-00	METAL GLAZE 1.8K 5% 1/10W	
R137	1-216-061-00	METAL GLAZE 3.3K 5% 1/10W	
R138	1-216-067-00	METAL GLAZE 5.6K 5% 1/10W	
R139	1-216-039-00	METAL GLAZE 390 5% 1/10W	
R140	1-216-039-00	METAL GLAZE 390 5% 1/10W	
R141	1-216-043-00	METAL GLAZE 560 5% 1/10W	
R142	1-216-043-00	METAL GLAZE 560 5% 1/10W	
R143	1-216-045-00	METAL GLAZE 680 5% 1/10W	
R144	1-216-061-00	METAL GLAZE 3.3K 5% 1/10W	
R145	1-216-049-00	METAL GLAZE 1K 5% 1/10W	
R146	1-216-083-00	METAL GLAZE 27K 5% 1/10W	
R147	1-216-077-00	METAL GLAZE 15K 5% 1/10W	
R148	1-249-411-11	CARBON 330 5% 1/4W	
R149	1-216-067-00	METAL GLAZE 5.6K 5% 1/10W	
R150	1-216-083-00	METAL GLAZE 27K 5% 1/10W	
R151	1-216-049-00	METAL GLAZE 1K 5% 1/10W	
R152	1-216-083-00	METAL GLAZE 27K 5% 1/10W	
R153	1-216-077-00	METAL GLAZE 15K 5% 1/10W	
R154	1-216-083-00	METAL GLAZE 27K 5% 1/10W	
R155	1-216-067-00	METAL GLAZE 5.6K 5% 1/10W	
R156	1-249-411-11	CARBON 330 5% 1/4W	
R157	1-216-049-00	METAL GLAZE 1K 5% 1/10W	
R158	1-216-083-00	METAL GLAZE 27K 5% 1/10W	
R159	1-216-077-00	METAL GLAZE 15K 5% 1/10W	
R160	1-216-083-00	METAL GLAZE 27K 5% 1/10W	
R161	1-216-067-00	METAL GLAZE 5.6K 5% 1/10W	
R162	1-249-411-11	CARBON 330 5% 1/4W	
R163	1-216-021-00	METAL GLAZE 68 5% 1/10W	
R164	1-216-021-00	METAL GLAZE 68 5% 1/10W	
R165	1-216-021-00	METAL GLAZE 68 5% 1/10W	
R166	1-216-045-00	METAL GLAZE 680 5% 1/10W	
R167	1-216-079-00	METAL GLAZE 18K 5% 1/10W	
R168	1-216-051-00	METAL GLAZE 1.2K 5% 1/10W	
R169	1-216-067-00	METAL GLAZE 5.6K 5% 1/10W	
R170	1-216-055-00	METAL GLAZE 1.8K 5% 1/10W	
R171	1-216-089-00	METAL GLAZE 47K 5% 1/10W	
R172	1-216-077-00	METAL GLAZE 15K 5% 1/10W	
R173	1-216-049-00	METAL GLAZE 1K 5% 1/10W	
R174	1-216-055-00	METAL GLAZE 1.8K 5% 1/10W	
R175	1-216-043-00	METAL GLAZE 560 5% 1/10W	
R176	1-216-049-00	METAL GLAZE 1k 5% 1/10W	
R177	1-216-049-00	METAL GLAZE 1K 5% 1/10W	
R178	1-216-049-00	METAL GLAZE 1K 5% 1/10W	
R179	1-216-055-00	METAL GLAZE 1.8K 5% 1/10W	

When indicating parts by reference number, please include the board name.

www.hifiengine.com

Ref.No	Part No.	Description	Remark
R180	1-212-863-00	FUSIBLE 18 5% 1/4W	F

VARIABLE RESISTOR

RV101	1-228-993-00	RES, ADJ, CARBON 4.7K	
RV102	1-228-990-00	RES, ADJ, CARBON 1K	
RV103	1-228-993-00	RES, ADJ, CARBON 4.7K	
RV104	1-228-993-00	RES, ADJ, CARBON 4.7K	
RV105	1-228-991-00	RES, ADJ, CARBON 2.2K	
RV106	1-228-991-00	RES, ADJ, CARBON 2.2K	
RV107	1-228-994-00	RES, ADJ, CARBON 10K	
RV108	1-228-989-00	RES, ADJ, METAL GLAZE 470	
RV109	1-228-990-00	RES, ADJ, METAL GLAZE 1K	
RV110	1-230-504-11	RES, ADJ, CARBON 220	
RV111	1-230-504-11	RES, ADJ, CARBON 220	

CRYSTAL

X101	1-567-504-11	OSCILLATOR, CRYSTAL	
X102	1-567-505-11	OSCILLATOR, CRYSTAL	

****

	*A-6421-372-A	PS-193 BOARD, COMPLETE (Ref. No 9,000 ********** Series)	
	*1-533-189-11	HOLDER, FUSE	
	*3-309-144-21	HEAT SINK	
	7-685-646-79	SCREW +BVTP 3X8 TYPE2 IT-3	

CAPACITOR

C101	1-125-298-00	ELECT(BLOCK) 10000MF	20%	25V
C102	1-124-314-00	ELECT 4700MF	20%	25V
C103	1-163-038-00	CERAMIC CHIP 0.1MF		25V
C104	1-163-007-11	CERAMIC CHIP 680PF	10%	50V
C105	1-163-989-11	CERAMIC CHIP 0.033MF	10%	25V
C106	1-164-232-11	CERAMIC CHIP 0.01MF	10%	50V
C107	1-124-471-00	ELECT 1000MF	20%	6.3V
C108	1-124-499-11	ELECT 1MF	20%	50V
C109	1-124-471-00	ELECT 1000MF	20%	6.3V
C110	1-163-833-00	CERAMIC CHIP 0.068MF		25V
C111	1-163-007-11	CERAMIC CHIP 680PF	10%	50V
C112	1-163-019-00	CERAMIC CHIP 0.0068MF	10%	50V
C114	1-126-101-11	ELECT 100MF	20%	16V
C115	1-163-037-11	CERAMIC CHIP 0.022MF	10%	25V
C116	1-163-833-00	CERAMIC CHIP 0.068MF		25V
C119	1-126-176-11	ELECT 220MF	20%	10V
C120	1-126-096-11	ELECT 10MF	20%	25V
C201	1-163-009-11	CERAMIC CHIP 0.001MF	10%	50V
C202	1-163-019-00	CERAMIC CHIP 0.0068MF	10%	50V
C203	1-163-009-11	CERAMIC CHIP 0.001MF	10%	50V
C204	1-163-009-11	CERAMIC CHIP 0.001MF	10%	50V
C205	1-163-017-00	CERAMIC CHIP 0.0047MF	10%	50V
C206	1-163-007-11	CERAMIC CHIP 680PF	10%	50V
C207	1-124-910-11	ELECT 47MF	20%	35V
C208	1-163-035-00	CERAMIC CHIP 0.047MF		50V
C209	1-163-017-00	CERAMIC CHIP 0.0047MF	10%	50V
C210	1-163-007-11	CERAMIC CHIP 680PF	10%	50V
C211	1-163-017-00	CERAMIC CHIP 0.0047MF	10%	50V
C212	1-163-035-00	CERAMIC CHIP 0.047MF		50V

CONNECTOR

CN002	*1-564-419-11	HEADER, SPRING (POWER) 2P
CN003	*1-560-890-00	PIN, CONNECTOR 2P

DIODE

D101 ⚠	.8-719-500-55	DIODE D3SBA10
D105	8-719-908-06	DIODE ERA81-005
D106	8-719-110-31	DIODE RD12ES-B2
D108	8-719-105-82	DIODE RD5.1M-B2
D110	8-719-175-88	DIODE RD7.5F-B
D201	8-719-908-06	DIODE ERA81-005
D202	8-719-908-06	DIODE ERA81-005
D203	8-719-200-02	DIODE 10E2
D204	8-719-200-02	DIODE 10E2
D205	8-719-911-19	DIODE 1SS119
D206	8-719-911-19	DIODE 1SS119
D207	8-719-911-19	DIODE 1SS119

FUSE

F101 ⚠	.1-532-299-00	FUSE, TIME-LAG
F102 ⚠	.1-532-299-00	FUSE, TIME-LAG
F301 ⚠	.1-532-078-00	FUSE, TIME-LAG

IC

IC101	8-759-971-39	IC BA9700AF-T1
IC102	8-759-604-47	IC M5F7905
IC201	8-759-100-93	IC UPC339G2
IC202	8-759-100-96	IC UPC4558G2

JUMPER RESISTOR

JR001	1-216-295-00	METAL GLAZE 0	5%	1/10W
JR005	1-216-295-00	METAL GLAZE 0	5%	1/10W

COIL

L101	1-412-012-11	INDUCTOR 100UH
L102	1-410-339-11	COIL, CHOKE 10UH
L201	1-424-219-11	COIL, CHOKE 300UH

TRANSISTOR

Q101	8-729-119-78	TRANSISTOR 2SC2785-HFE
Q102	8-729-216-22	TRANSISTOR 2SA1162
Q103	8-729-113-31	TRANSISTOR 2SB733-2
Q105	8-729-159-64	TRANSISTOR 2SD596
Q201	8-729-117-11	TRANSISTOR 2SB1151
Q202	8-729-142-63	TRANSISTOR 2SD1691
Q203	8-729-117-11	TRANSISTOR 2SB1151
Q204	8-729-142-63	TRANSISTOR 2SD1691
Q205	8-729-119-78	TRANSISTOR 2SC2785-HFE

When indicating parts by reference number, please include the board name.

Note: The components identified by mark ⚠ or dotted line with mark ⚠ are critical for safety. Replace only with part number specified.

www.hifiengine.com

PS-193 TR-30

Ref.No	Part No.	Description				Remark
Q206	8-729-216-22	TRANSISTOR 2SA1162				
Q208	8-729-900-53	TRANSISTOR DTC114EK				
Q209	8-729-901-04	TRANSISTOR DTA114EK				
Q210	8-729-100-67	TRANSISTOR 2SC1623				
Q211	8-729-119-76	TRANSISTOR 2SA1175-HFE				
Q212	8-729-901-04	TRANSISTOR DTA114EK				
		RESISTOR				
R002	1-216-296-00	METAL GLAZE	0	5%	1/8W	
R003	1-216-296-00	METAL GLAZE	0	5%	1/8W	
R004	1-216-296-00	METAL GLAZE	0	5%	1/8W	
R101	1-216-073-00	METAL GLAZE	10K	5%	1/10W	
R102	1-216-073-00	METAL GLAZE	10K	5%	1/10W	
R103	1-216-089-00	METAL GLAZE	47K	5%	1/10W	
R104	1-216-065-00	METAL GLAZE	4.7K	5%	1/10W	
R105	1-216-073-00	METAL GLAZE	10K	5%	1/10W	
R106	1-216-053-00	METAL GLAZE	1.5K	5%	1/10W	
R107	1-216-067-00	METAL GLAZE	5.6K	5%	1/10W	
R108	1-216-043-00	METAL GLAZE	560	5%	1/10W	
R109	1-216-687-11	METAL CHIP	33K	0.50%	1/10W	
R110	1-216-676-11	METAL CHIP	11K	0.50%	1/10W	
R112	1-216-099-00	METAL GLAZE	120K	5%	1/10W	
R114	1-216-097-00	METAL GLAZE	100K	5%	1/10W	
R115	1-216-446-00	METAL OXIDE	18	5%	2W	F
R116	1-216-049-00	METAL GLAZE	1K	5%	1/10W	
R117	1-216-049-00	METAL GLAZE	1K	5%	1/10W	
R120	1-216-043-00	METAL GLAZE	560	5%	1/10W	
R201	1-216-081-00	METAL GLAZE	22K	5%	1/10W	
R202	1-216-075-00	METAL GLAZE	12K	5%	1/10W	
R203	1-216-093-00	METAL GLAZE	68K	5%	1/10W	
R204	1-216-065-00	METAL GLAZE	4.7K	5%	1/10W	
R205	1-216-075-00	METAL GLAZE	12K	5%	1/10W	
R206	1-216-097-00	METAL GLAZE	100K	5%	1/10W	
R207	1-216-073-00	METAL GLAZE	10K	5%	1/10W	
R208	1-216-073-00	METAL GLAZE	10K	5%	1/10W	
R209	1-216-073-00	METAL GLAZE	10K	5%	1/10W	
R210	1-216-105-00	METAL GLAZE	220K	5%	1/10W	
R211	1-216-073-00	METAL GLAZE	10K	5%	1/10W	
R212	1-216-065-00	METAL GLAZE	4.7K	5%	1/10W	
R213	1-216-049-00	METAL GLAZE	1K	5%	1/10W	
R214	1-247-750-11	CARBON	680	5%	1/2W	
R215	1-247-750-11	CARBON	680	5%	1/2W	
R216	1-216-049-00	METAL GLAZE	1K	5%	1/10W	
R217	1-216-369-00	METAL OXIDE	1	5%	2W	F
R218	1-216-690-11	METAL CHIP	43K	0.50%	1/10W	
R219	1-216-675-11	METAL CHIP	10K	0.50%	1/10W	
R220	1-216-690-11	METAL CHIP	43K	0.50%	1/10W	
R221	1-216-675-11	METAL CHIP	10K	0.50%	1/10W	
R222	1-216-073-00	METAL GLAZE	10K	5%	1/10W	
R223	1-216-073-00	METAL GLAZE	10K	5%	1/10W	
R224	1-215-866-11	METAL OXIDE	330	5%	1W	F
R225	1-216-073-00	METAL GLAZE	10K	5%	1/10W	

Ref.No	Part No.	Description				Remark
R226	1-247-750-11	CARBON	680	5%	1/2W	
R227	1-216-073-00	METAL GLAZE	10K	5%	1/10W	
R228	1-216-093-00	METAL GLAZE	68K	5%	1/10W	
R230	1-216-105-00	METAL GLAZE	220K	5%	1/10W	
R231	1-216-073-00	METAL GLAZE	10K	5%	1/10W	
		SWITCH				
SW301 ⚠	1-553-318-61	SWITCH, PUSH (AC POWER)(1 KEY)				
		LINE FILTER				
T301 ⚠	1-421-771-11	FILTER, LINE				

****

*1-630-089-31 TR-30 BOARD (Ref.No 1,000 Series)
****

		CAPACITOR			
C401 ⚠	1-136-472-11	FILM	0.1MF	20%	250V
C416	1-124-122-11	ELECT	100MF	20%	50V
C417	1-124-910-11	ELECT	47MF	20%	50V
C418	1-124-122-11	ELECT	100MF	20%	35V
C419	1-124-122-11	ELECT	100MF	20%	50V
C420	1-163-033-00	CERAMIC CHIP	0.022MF		50V
		CONNECTOR			
CN401	1-506-483-21	PIN, CONNECTOR 4P			
CN402	*1-564-028-00	PIN, CONNECTOR 3P			
CN403	*1-564-028-00	PIN, CONNECTOR 3P			
		DIODE			
D406 ⚠	8-719-200-02	DIODE 10E2			
D407	8-719-110-78	DIODE RD33ES-B2			
D408	8-719-110-88	DIODE RD39ES-B2			
D409	8-719-110-17	DIODE RD10ES-B2			
		TRANSISTOR			
Q404	8-729-113-33	TRANSISTOR 2SB733-4			
		RESISTOR			
R416 ⚠	1-249-401-11	CARBON	47	5%	1/4W F
R417	1-249-416-11	CARBON	820	5%	1/4W
R418	1-249-405-11	CARBON	100	5%	1/4W

****

When indicating parts by reference number, please include the board name.

Note: The components identified by mark ⚠ or dotted line with mark ⚠ are critical for safety. Replace only with part number specified.

www.hifiengine.com

Ref.No	Part No.	Description				Remark
	*A-6421-368-A	FP-197 BOARD, COMPLETE (MDP-315) ********** (Ref.No 7,000 Series)				
	*A-6421-374-A	FP-222 BOARD, COMPLETE (MDP-515D) ********** (Ref.No 8,000 Series)				
	*3-735-049-11	HOLDER, FL TUBE				
		CAPACITOR				
C001	1-163-023-00	CERAMIC CHIP 0.015MF		10%	50V	
C002	1-163-101-00	CERAMIC CHIP 22PF		5%	50V	
C003	1-163-101-00	CERAMIC CHIP 22PF		5%	50V	
C004	1-164-232-11	CERAMIC CHIP 0.01MF		10%	50V	
C005	1-126-157-11	ELECT 10MF		20%	16V	
C006	1-164-232-11	CERAMIC CHIP 0.01MF		10%	50V	
C007	1-126-157-11	ELECT 10MF		20%	16V	
C008	1-164-232-11	CERAMIC CHIP 0.01MF		10%	50V	
C009	1-126-157-11	ELECT 10MF		20%	16V	
C010	1-164-232-11	CERAMIC CHIP 0.01MF		10%	50V	
C011	1-124-242-00	ELECT 33MF		20%	16V	
C012	1-164-232-11	CERAMIC CHIP 0.01MF		10%	50V	
C013	1-164-232-11	CERAMIC CHIP 0.01MF		10%	50V	
		CONNECTOR				
CN001	1-506-483-21	PIN, CONNECTOR 4P				
CN002	*1-564-019-11	PIN, CONNECTOR 9P				
CN003	1-506-485-11	PIN, CONNECTOR 6P (MDP-315)				
CN003	1-506-486-11	PIN, CONNECTOR 7P (MDP-515D)				
CN004	1-506-484-11	PIN, CONNECTOR 5P (MDP-315)				
CN004	1-506-486-11	PIN, CONNECTOR 7P (MDP-515D)				
		IC				
IC001	8-752-810-78	IC CXP5058H-647Q				
IC002	8-752-810-77	IC CXP5048H-201Q				
IC003	8-759-605-21	IC M51953AFP				
IC004	8-741-138-78	IC BX-1453				
IC005	8-759-926-64	IC SN74HC367NS				
		COIL				
L001	1-407-169-XX	INDUCTOR 100UH				
L002	1-407-169-XX	INDUCTOR 100UH				
		INDICATOR TUBE				
ND001	1-519-511-11	INDICATOR TUBE, FLUORESCENT				
		TRANSISTOR				
Q001	8-729-100-66	TRANSISTOR 2SC1623				
Q002	8-729-100-66	TRANSISTOR 2SC1623				
		RESISTOR				
R001	1-216-097-00	METAL GLAZE	100K	5%	1/10W	
R002	1-216-073-00	METAL GLAZE	10K	5%	1/10W	
R003	1-216-097-00	METAL GLAZE	100K	5%	1/10W	
R004	1-216-073-00	METAL GLAZE	10K	5%	1/10W	
R005	1-216-073-00	METAL GLAZE	10K	5%	1/10W	
R006	1-216-071-00	METAL GLAZE	8.2K	5%	1/10W	
R007	1-216-073-00	METAL GLAZE	10K	5%	1/10W	
R008	1-216-073-00	METAL GLAZE	10K	5%	1/10W	
R009	1-216-073-00	METAL GLAZE	10K	5%	1/10W	
R010	1-216-073-00	METAL GLAZE	10K	5%	1/10W	
R011	1-216-079-00	METAL GLAZE	18K	5%	1/10W	
R012	1-216-069-00	METAL GLAZE	6.8K	5%	1/10W	
R013	1-216-063-00	METAL GLAZE	3.9K	5%	1/10W	
R014	1-216-059-00	METAL GLAZE	2.7K	5%	1/10W	
R015	1-216-079-00	METAL GLAZE	18K	5%	1/10W	
R016	1-216-069-00	METAL GLAZE	6.8K	5%	1/10W	
R017	1-216-063-00	METAL GLAZE	3.9K	5%	1/10W	
R018	1-216-059-00	METAL GLAZE	2.7K	5%	1/10W	
R019	1-216-079-00	METAL GLAZE	18K	5%	1/10W	
R020	1-216-069-00	METAL GLAZE	6.8K	5%	1/10W	
R021	1-216-063-00	METAL GLAZE	3.9K	5%	1/10W	
R022	1-216-059-00	METAL GLAZE	2.7K	5%	1/10W	
R023	1-216-073-00	METAL GLAZE	10K	5%	1/10W	
R024	1-216-073-00	METAL GLAZE	10K	5%	1/10W	
R025	1-216-073-00	METAL GLAZE	10K	5%	1/10W	
R026	1-216-073-00	METAL GLAZE	10K	5%	1/10W	
R027	1-216-073-00	METAL GLAZE	10K	5%	1/10W	
R028	1-216-073-00	METAL GLAZE	10K	5%	1/10W	
R029	1-216-073-00	METAL GLAZE	10K	5%	1/10W	
R030	1-216-063-00	METAL GLAZE	3.9K	5%	1/10W	(MDP-515D)
R031	1-216-059-00	METAL GLAZE	2.7K	5%	1/10W	(MDP-515D)
		SWITCH				
S001	1-553-856-00	SWITCH, KEY BOARD (1A)				
S002	1-553-856-00	SWITCH, KEY BOARD (2B)				
S003	1-553-856-00	SWITCH, KEY BOARD (3C)				
S004	1-553-856-00	SWITCH, KEY BOARD (6F)				
S005	1-553-856-00	SWITCH, KEY BOARD (9)				
S006	1-553-856-00	SWITCH, KEY BOARD (4D)				
S007	1-553-856-00	SWITCH, KEY BOARD (5E)				
S008	1-553-856-00	SWITCH, KEY BOARD (8)				
S009	1-553-856-00	SWITCH, KEY BOARD (7)				
S010	1-553-856-00	SWITCH, KEY BOARD (+10)				
S011	1-553-856-00	SWITCH, KEY BOARD (FILE)				
S012	1-553-856-00	SWITCH, KEY BOARD (INDEX)				
S013	1-553-856-00	SWITCH, KEY BOARD (AV TIME)				
S014	1-553-856-00	SWITCH, KEY BOARD (CDV)				
S015	1-553-856-00	SWITCH, KEY BOARD (0)				
S016	1-571-758-11	SWITCH, PUSH (1 KEY) (SIDE REPEAT)				
S017	1-553-856-00	SWITCH, KEY BOARD (1/ALL) (MDP-515D)				
S018	1-553-856-00	SWITCH, KEY BOARD (⏮) (MDP-515D)				
S019	1-553-856-00	SWITCH, KEY BOARD (⏭) (MDP-515D)				
S020	1-570-157-21	SWITCH, SLIDE (RGB) (MDP-515D)				
		CRYSTAL				
X001	1-567-160-21	OSCILLATOR, CERAMIC (4.19MHz)				

When indicating parts by reference number, please include the board name.

www.hifiengine.com

FP-223 FP-198 HP-50 LS-17 SW-106

Ref.No	Part No.	Description	Remark
	*A-6421-375-A	FP-223 BOARD, COMPLETE (MDP-515D) **********	
	*1-630-099-11	FP-198 BOARD (MDP-315) **********	
	3-737-426-01	REFLECTOR	
		CONNECTOR	
CN001	1-506-486-11	PIN, CONNECTOR 7P	
		DIODE	
D001	8-719-301-56	DIODE SEL2813A-D (PAL) (MDP-515D)	
D002	8-719-301-46	DIODE SEL2413E (NTSC) (MDP-515D)	
		TRANSISTOR	
Q001	8-729-900-80	TRANSISTOR DTC114ES (MDP-515D)	
Q002	8-729-900-61	TRANSISTOR DTA114ES (MDP-515D)	
		RESISTOR	
R001	1-249-422-11	CARBON 2.7K 5% 1/4W (MDP-315)	
R001	1-249-427-11	CARBON 6.8K 5% 1/4W(MDP-515D)	
R002	1-247-814-11	CARBON 200 5% 1/4W(MDP-515D)	
R002	1-249-424-11	CARBON 3.9K 5% 1/4W (MDP-315)	
R003	1-247-814-11	CARBON 200 5% 1/4W(MDP-515D)	
R003	1-249-427-11	CARBON 6.8K 5% 1/4W (MDP-315)	
R004	1-249-432-11	CARBON 18K 5% 1/4W	
R005	1-249-422-11	CARBON 2.7K 5% 1/4W	
R006	1-249-424-11	CARBON 3.9K 5% 1/4W	
R007	1-249-427-11	CARBON 6.8K 5% 1/4W	
R008	1-249-430-11	CARBON 12K 5% 1/4W	
R009	1-249-432-11	CARBON 18K 5% 1/4W	
		SWITCH	
S001	1-553-856-00	SWITCH, KEY BOARD (⏮) (MDP-315)	
S002	1-553-856-00	SWITCH, KEY BOARD (⏭) (MDP-315)	
S003	1-554-592-21	SWITCH, KEY BOARD (DUAL SPEED ◀◀)	
S004	1-553-856-00	SWITCH, KEY BOARD (OPEN/CLOSE)	
S005	1-553-856-00	SWITCH, KEY BOARD (▷)	
S006	1-553-856-00	SWITCH, KEY BOARD (⏸/⏯)	
S007	1-553-856-00	SWITCH, KEY BOARD (■)	
S008	1-554-592-21	SWITCH, KEY BOARD (DUAL SPEED ▶▶)	
S009	1-570-157-21	SWITCH, SLIDE (STOP MODE)	

****

	*1-630-090-11	HP-50 BOARD (Ref.No 5,000 Series) **********	
	3-735-057-01	HOLDER, HP	
		CAPACITOR	
C101	1-124-478-11	ELECT 100MF 20% 25V	
C102	1-124-478-11	ELECT 100MF 20% 25V	
		CONNECTOR	
CN101	1-506-471-11	PIN, CONNECTOR 6P	
		JACK	
CNJ101	1-507-796-71	JACK	
		IC	
IC101	8-759-701-45	IC NJM4560S-D	
		RESISTOR	
R101	1-249-417-11	CARBON 1K 5% 1/4W	
R102	1-249-425-11	CARBON 4.7K 5% 1/4W	
R103	1-249-430-11	CARBON 12K 5% 1/4W	
R104	1-249-405-11	CARBON 100 5% 1/4W	
R105	1-249-417-11	CARBON 1K 5% 1/4W	
R106	1-249-425-11	CARBON 4.7K 5% 1/4W	
R107	1-249-430-11	CARBON 12K 5% 1/4W	
R108	1-249-405-11	CARBON 100 5% 1/4W	
R109	1-249-409-11	CARBON 220 5% 1/4W	
R110	1-249-409-11	CARBON 220 5% 1/4W	
		VARIABLE RESISTOR	
RV101	1-238-581-11	RES, VAR	

****

	*1-630-091-11	LS-17 BOARD (Ref.No 3,000 Series) **********	
	3-735-054-01	HOLDER, SENSOR	
		DIODE	
D201	8-719-941-81	DIODE GL360	
		TRANSISTOR	
Q201	8-729-904-10	PT360FS	

****

	*1-630-092-11	SW-106 BOARD (Ref.No 3,000 Series) **********	
		CONNECTOR	
CN301	1-506-467-11	PIN, CONNECTOR 2P	
		SWITCH	
S301	1-554-655-00	SWITCH, LEAF	

****

When indicating parts by reference number, please include the board name.

www.hifiengine.com

SW-107 | CK-14 | FG-13 | MT-28 | MT-29 | MT-30

Ref.No	Part No.	Description				Remark
	*1-630-093-11	SW-107 BOARD (Ref. No 3,000 Series)				
		**********				
		CONNECTOR				
CN401	1-506-481-11	PIN, CONNECTOR 2P				
		RESISTOR				
R401	1-249-423-11	CARBON	3.3K	5%	1/4W	
R402	1-249-417-11	CARBON	1K	5%	1/4W	
		SWITCH				
S401	1-571-300-11	SWITCH, ROTARY				

****

	*1-630-094-11	CK-14 BOARD (Ref. No 4,000 Series)				
		**********				
		CAPACITOR				
C001	1-163-038-00	CERAMIC CHIP 0.1MF				25V
C002	1-163-038-00	CERAMIC CHIP 0.1MF				25V
		CONNECTOR				
CN001	*1-564-001-41	PIN, CONNECTOR 2P				
CN002	1-506-468-11	PIN, CONNECTOR 3P				
CN003	1-506-467-11	PIN, CONNECTOR 2P				
CN004	*1-564-001-21	PIN, CONNECTOR 2P				
CN005	*1-564-001-31	PIN, CONNECTOR 2P				
		JUMPER RESISTOR				
JR001	1-216-295-00	METAL GLAZE	0	5%	1/10W	
JR002	1-216-296-00	METAL GLAZE	0	5%	1/8W	
		RESISTOR				
R001	1-216-077-00	METAL GLAZE	15K	5%	1/10W	
R002	1-216-031-00	METAL GLAZE	180	5%	1/10W	
R003	1-216-061-00	METAL GLAZE	3.3K	5%	1/10W	
R004	1-216-001-00	METAL GLAZE	10	5%	1/10W	
R005	1-216-001-00	METAL GLAZE	10	5%	1/10W	
R006	1-216-031-00	METAL GLAZE	180	5%	1/10W	
R007	1-216-061-00	METAL GLAZE	3.3K	5%	1/10W	

****

	*1-630-096-11	FG-13 BOARD (Ref. No 4,000 Series)				
		**********				
		DIODE				
D301	8-719-939-11	GP2S09-B				

****

Ref.No	Part No.	Description	Remark
	*1-630-097-11	MT-28 BOARD	
		**********	

****

	*1-630-101-11	MT-29 BOARD	
		**********	

****

	*1-631-095-11	MT-30 BOARD	
		**********	

****

MISCELLANEOUS
****

	⚠.1-551-908-61	CORD, POWER, EULO PLUG	
	1-574-648-11	CABLE, FLEXIBLE FLAT (24 CORE)	
	*1-574-755-11	WIRE, FLAT TYPE 28P	
M901	1-541-665-11	MOTOR, SPINDLE	
M902	1-541-659-11	MOTOR, DC (SLED)	
M903	1-541-659-11	MOTOR, DC (TILT)	
M904	1-541-309-11	MOTOR, DC (RF-370C) (LOADING)	
S901	1-571-435-11	SWITCH (SLED IN LIMIT)	
S902	1-570-771-21	SWITCH (SLED OUT LIMIT)	
S903	1-554-468-00	SWITCH, LEAF (SLED IN LIMIT LD/CD)	
T401	⚠.1-449-849-11	TRANSFORMER, POWER	

****

ACCESSORIES AND PACKING MATERIALS
****

Part No.	Description	Remark
1-465-161-31	REMOTE COMMANDER (RMT-515D)	
*3-710-964-01	SHEET, PROTECTION	
*3-735-072-01	CUSHION (UPPER)	
*3-735-073-01	CUSHION (LOWER)	
*3-737-442-31	INDIVIDUAL CARTON	
3-750-763-41	MANUAL, INSTRUCTION (MDP-315) (ENGLISH)	
3-750-763-51	MANUAL, INSTRUCTION (MDP-315) (FRENCH/GERMAN/SPANISH)	
3-750-763-61	MANUAL, INSTRUCTION (MDP-315) (DUTCH/SWEDISH/ITALIAN)	
3-750-764-41	MANUAL, INSTRUCTION (MDP-515D) (ENGLISH)	
3-750-764-51	MANUAL, INSTRUCTION (MDP-515D) (AEP MODEL) (FRENCH/GERMAN/SPANISH)	
3-750-764-61	MANUAL, INSTRUCTION (MDP-515D) (AEP MODEL) (DUTCH/SWEDISH/ITALIAN)	
1-559-533-11	CORD, CONNECTION (AUS MODEL) (2PHONO to 2PHONO AUDIO)	
1-551-086-31	CORD, CONNECTION (AUS MODEL) (1PHONO to 1PHONO VIDEO)	

****

When indicating parts by reference number, please include the board name.

Note: The components identified by mark ⚠ or dotted line with mark ⚠ are critical for safety. Replace only with part number specified.

www.hifiengine.com

Ref.No	Part No.	Description	Remark

HARDWARE LIST
****

WASHER

	7-623-423-07	LW 4, TYPE B

STOP RING

	7-624-108-04	STOP RING 4.0, TYPE -E

SCREW

	7-621-255-55	SCREW +P 2X8
	7-682-545-04	SCREW (3X4) (G), TAPPING, (+) P
	7-682-645-01	SCREW +PS 3X4
	7-685-645-79	SCREW +BVTP 3X6 TYPE2 IT-3
	7-685-646-79	SCREW +BVTP 3X8 TYPE2 IT-3
	7-685-647-79	SCREW +BVTP 3X10 TYPE2 IT-3
	7-685-648-79	SCREW +BVTP 3X12 TYPE2 IT-3
	7-685-649-79	SCREW +BVTP 3X14 TYPE2 IT-3
	7-685-661-79	SCREW +BVTP 4X12 TYPE2 SLIT
	7-685-870-01	SCREW +BVTT 3X5 (S)

****

www.hifiengine.com

SECTION 7
ELECTRICAL ADJUSTMENTS

During these adjustment, see the parts arrangement diagram relevant to the adjustment on page from 146.

1-1. LIST OF SERVICING JIGS

- Oscilloscope
- Color monitor TV
- Digital voltmeter
- Audio level meter
- Frequency counter
- Remote commander (RMT-515D)
- LD alignment disc { REF3P (8-597-903-01) ····PAL / REF7 (8-597-901-03) ····NTSC
- CD alignment disc YEDS-18 (3-702-101-01)
- MD adjustment cable (J-6082-059-A)

1-2. CAUTIONS ON ADJUSTMENT

- Disc load/unload operation must not be performed when servicing with the unit laying down sideways. (Never press the OPEN and CLOSE buttons.)
- When laying the unit down sideways, perform adjustment with the left side down and turn the power on.
- When adjusting the servo system, be sure to set up the unit horizontally.

1-3. MD ADJUSTMENT CABLE (J-6082-059-A)

MD adjustment cable is used to adjust the servo system with connecting to the SV-33 board. Remove it except when adjusting the servo system.

MD adjustment cable

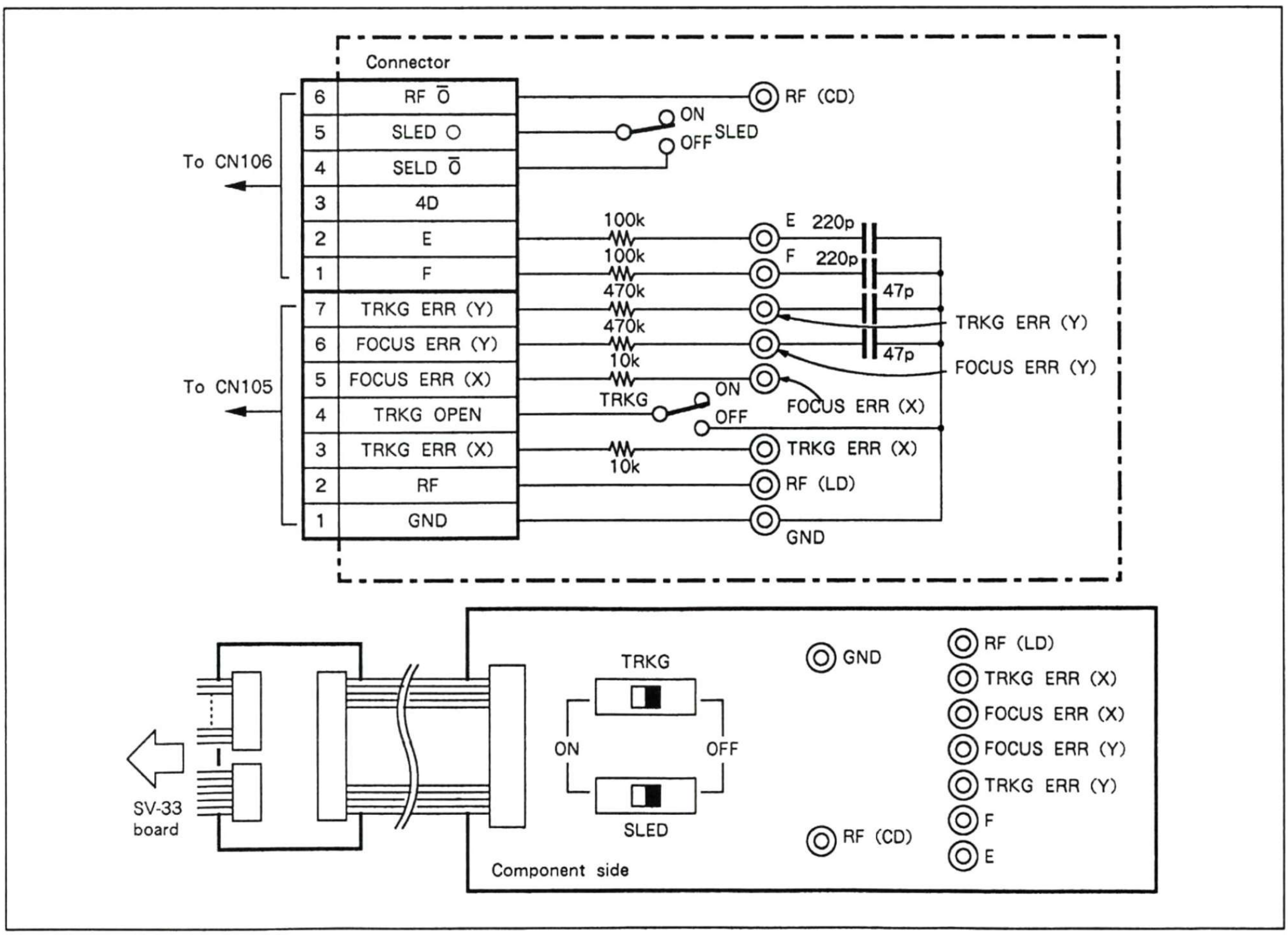

Fig. 7-1.

1-4. POWER SUPPLY CHECK (PS-193 BOARD)

Mode	Stop
Measuring Equipment	Digital voltmeter
UN REG +16V check	
Measurement Point	Pin ① of W002 (Pin ②, GND)
Specified Value	14.5±1V
UN REG −16V check	
Measurement Point	Pin ③ of W002 (Pin ②, GND)
Specified Value	−14.5±1V
REG +5V check	
Measurement Point	Pin ⑥ of W002 (Pin ⑤, GND)
Specified Value	5.1±0.2V
REG −5V check	
Measurement Point	Pin ⑦ of W002 (Pin ⑤, GND)
Specified Value	−5±0.5V

- Confirm that the power supply voltages satisfy the respective specified values.

1-5. SYSTEM CONTROL SYSTEM ADJUSTMENT

1-5-1. Microprocessor Clock (PAL) Adjustment (MP-15 Board)

Mode	Stop
Measurement Point	Pin ① of IC608
Measuring Equipment	Frequency counter
Adjusting Element	CV 601
Specified Value	4.433.619 ±10Hz

Adjustment method:
1) Adjust with CV601 to 4.433.619 ±10Hz.

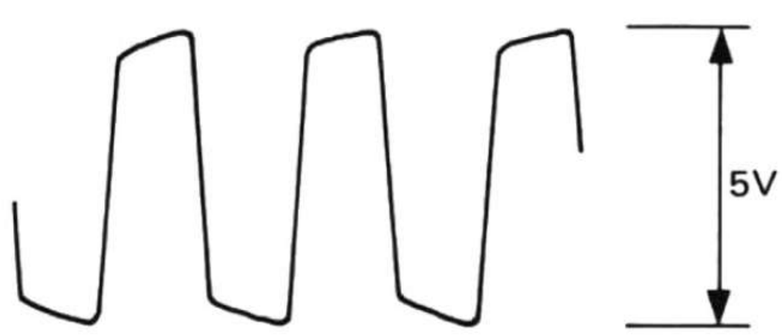

4,433,619± 10Hz

Fig. 7-2.

1-5-2. Microprocessor Clock (NTSC) Adjustment (MP-15 Board)

Mode	Stop
Measurement Point	Pin ⑲ of IC 613
Measuring Equipment	Frequency counter
Adjusting Element	CV 602
Specified Value	3,579,545±10Hz

Adjustment method :
1) Adjust with CV602 to 3,579,545±10Hz.

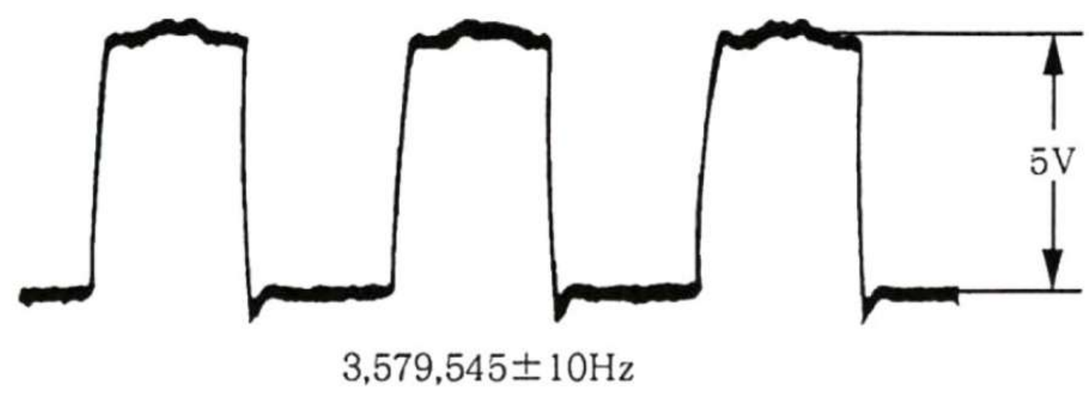

Fig. 7-3.

1-6. SERVO SYSTEM ADJUSTMENT

When adjusting the servo system, look out for the following items :

- Use the MD adjustment cable (J-6082-059-A).
- Adjust the CD servo system after the digital audio system adjustment is completed.
- When setting the tracking servo to the open state, set to the STOP state once and proceed to the next step.
- When the optical block is replaced, perform the adjustment in the following order.

Note : Start adjustment at maximum CD RF H level (RV108 fully counterclockwise direction).

1. LD Tracking Balance Adjustment
   1) Focus balance adjustment
   2) Tracking balance adjustment
2. LD Focus Gain Adjustment
3. LD Cross Talk Balance Adjustment
   1) TAN cam adjustment
   2) RAD-TILT adjustment
   3) Focus balance adjustment
4. LD Tracking Gain Adjustment
5. RD Adjustment
6. CD Focus Balance Adjustment
7. CD RF H Level Adjustment
8. CD RF L Level Adjustment

www.hifiengine.com

1-6-1. LD Servo System Adjustment

1. LD Tracking Balance Adjustment (SV-33 Board)

1) Focus balance adjustment

Note : Perform successively 1) and 2) adjustment in this order.

Mode	Still
Signal	Frame 2201 (GRAY) (REF3P)
Measurement Point	MD adjustment cable [TRKG ERR (X)] (Pin ③ of CN105)
Measuring Equipment	Oscilloscope
Adjusting Element	RV102
Specified Value	Maximum amplitude

Adjustment method :

1) Select STILL (⏭) mode.
2) Search the frame 2201 (GRAY).
3) Turn the thread servo off. (MD adjustment cable SLED SW OFF)
4) Turn the tracking servo off. (MD adjustment cable TRKG SW OFF)
5) Adjust with RV102 so as to maximize the signal level.

Fig. 7-4.

2) Tracking balance adjustment

Mode	Still
Signal	Frame 2201 (GRAY) (REF3P)
Measurement Point	MD adjustment cable [TRKG ERR (X)] (Pin ③ of CN105)
Measuring Equipment	Oscilloscope
Adjusting Element	RV101
Specified Value	A−B=0±0.1V

Adjustment method :

Note : Perform successively this adjustment after "1) Focus balance adjustment" is completed.

6) Adjust with RV101 so that the center voltage of the tracking error signal becomes 0±0.1Vdc.
7) Select STOP (■) mode.
8) Turn the tracking servo on.
9) Turn the thread servo on.

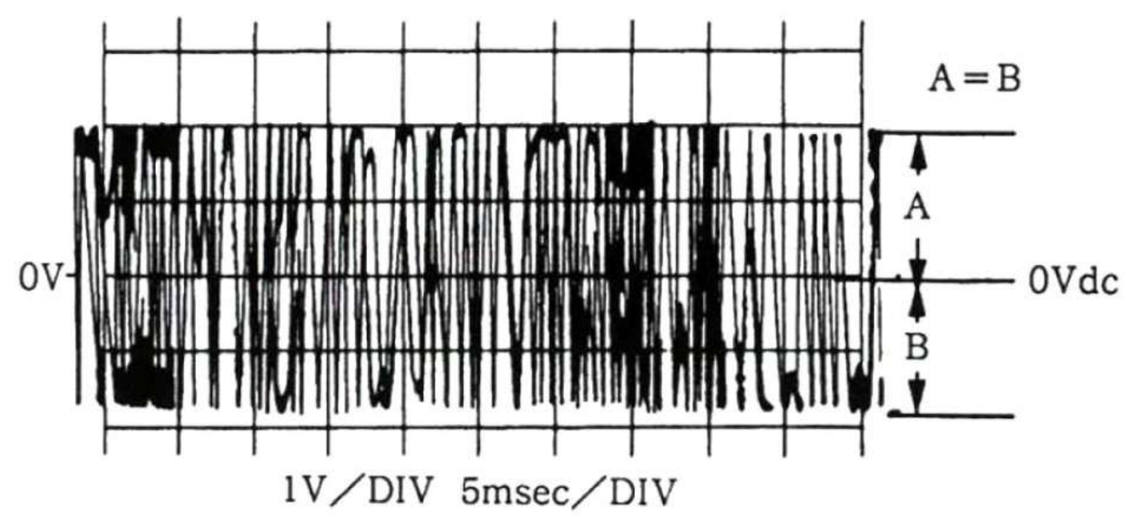

Fig. 7-5.

www.hifiengine.com

2. LD Focus Gain Adjustment (SV-33 Board)

Mode	Playback
Signal	Frame 2201 (GRAY) (REF3P)
Measurement Point	MD adjustment cable CH1 : [FOCUS ERR (Y)] (Pin ⑥ of CN105) CH2 : [FOCUS ERR (X)] (Pin ⑤ of CN105)
Measuring Equipment	Oscilloscope (X-Y mode)
Adjusting Element	RV107
Specified Value	See figure below

Connections :

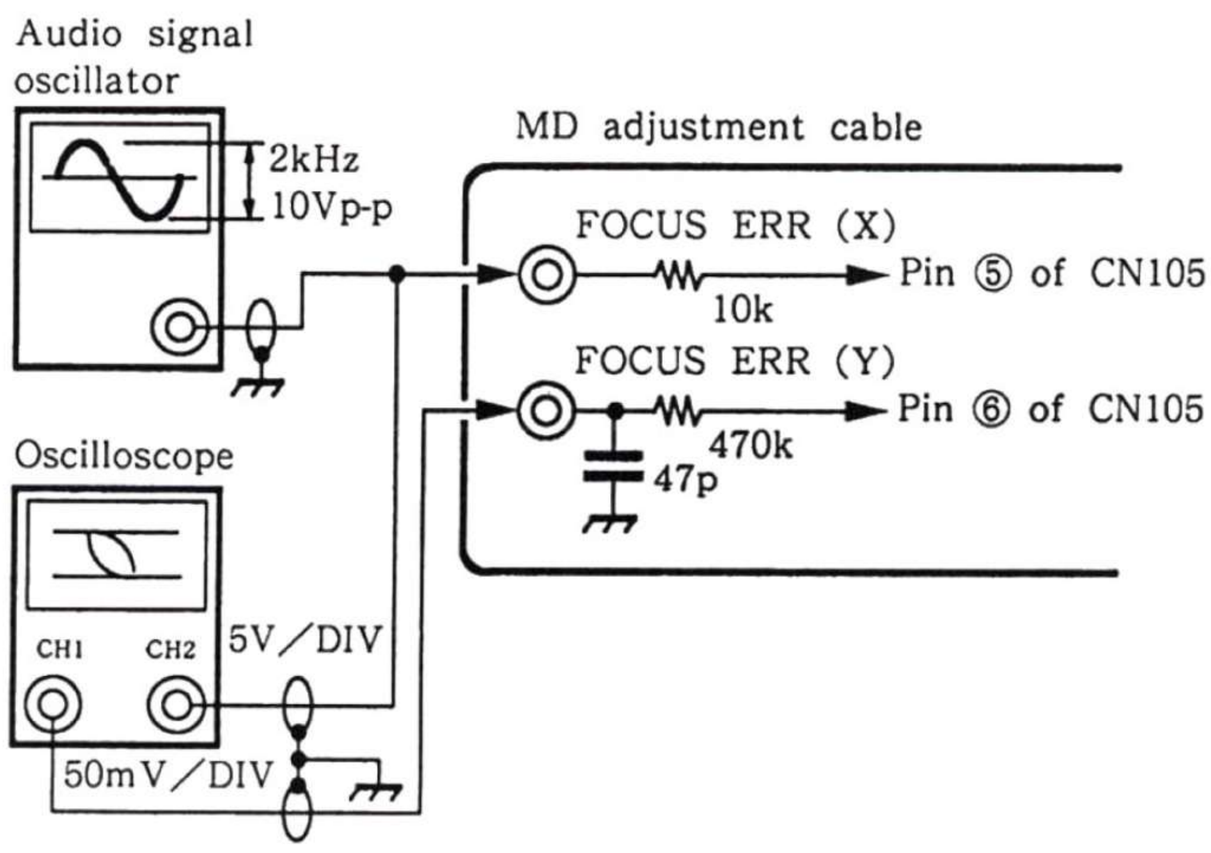

Adjustment method :

1) Search the frame 2201.
2) Adjust the waveform as shown in the figure below with RV107.

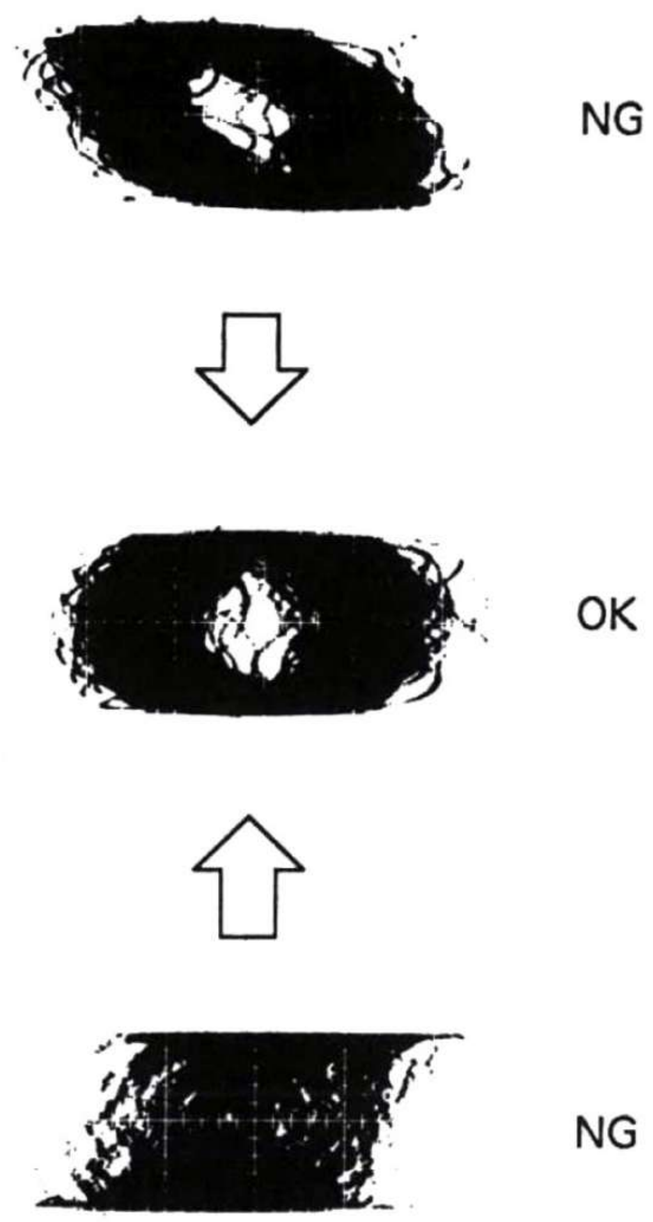

Fig. 7-6.

www.hifiengine.com

3. LD Cross Talk Balance Adjustment

1) TAN cam adjustment (MD)
   The cam is always set to the initial position. When replacing the optical block and so on, set the cam to the mechanical center.*
   *Mechanical center :
   Marked with the notch of the cam located at the opposite side of the optical block chassis shaft.

Adjustment method :

1) Turn the TAN cam on the bottom (See Fig. 1-11.) with a hexagonal wrench.

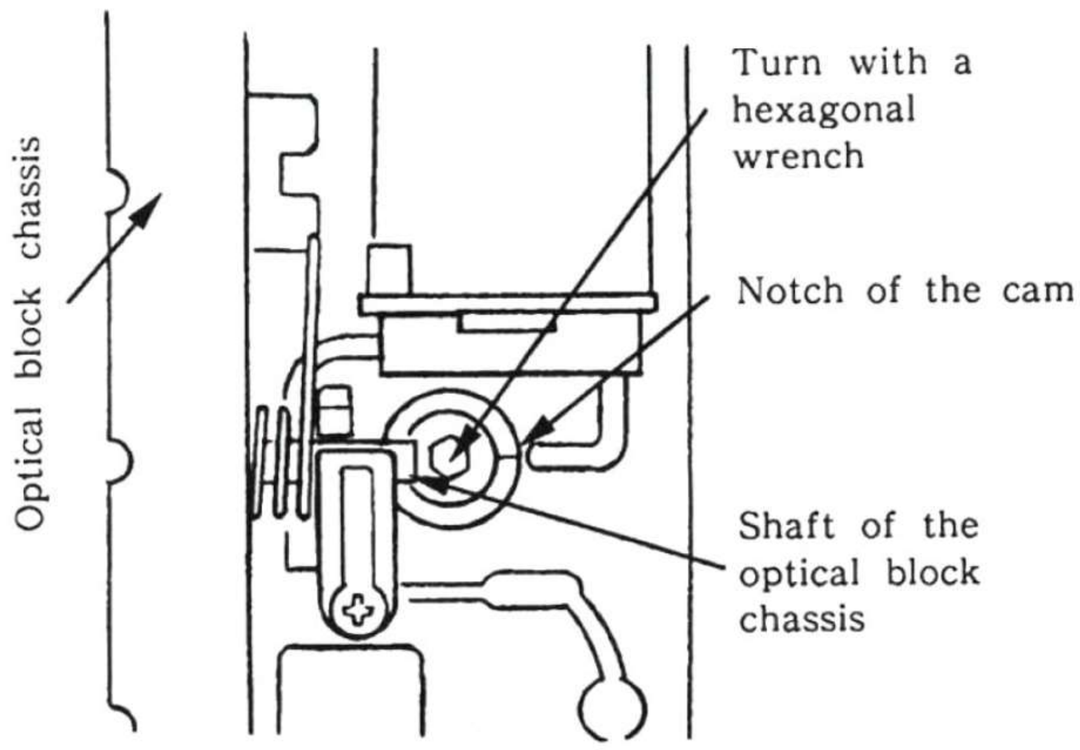

Fig. 7-7.

2) RAD TILT adjustment (SV-33 board)

Mode	Still
Signal	Frame 767 (V BAR) (REF3P)
Measurement Point	Monitor TV
Measuring Equipment	Monitor TV
Adjusting Element	RV105
Specified Value	Cross talk (wavering) with minimum as well as the same level.

Adjustment method :

1) Select STILL (⏭) mode.
2) Search the frame 767 and apply a vertical bar signal.
3) Adjust with RV105 so that the rigth and left cross talks (wavering) become minimum as well as the level.

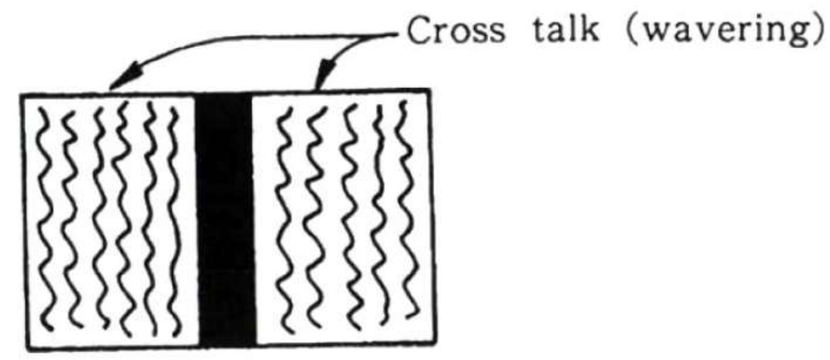

Adjust so that cross talks appeared on the both sides on the monitor display become minimum as well as the same level.

Fig. 7-8.

3) Focus balance adjustment (SV-33 board)

Mode	Still
Signal	Frame 767 (V BAR) (REF3P)
Measurement Point	Monitor TV
Measuring Equipment	Monitor TV
Adjusting Element	RV102
Specified Value	Cross talk (wavering) with minimum as well as the same level.

Adjustment method :

1) Select STILL (⏭) mode.
2) Search the frame 767 and apply a vertical bar signal.
3) Adjust with RV102 to minimize the right and left cross talks (wavering) level.

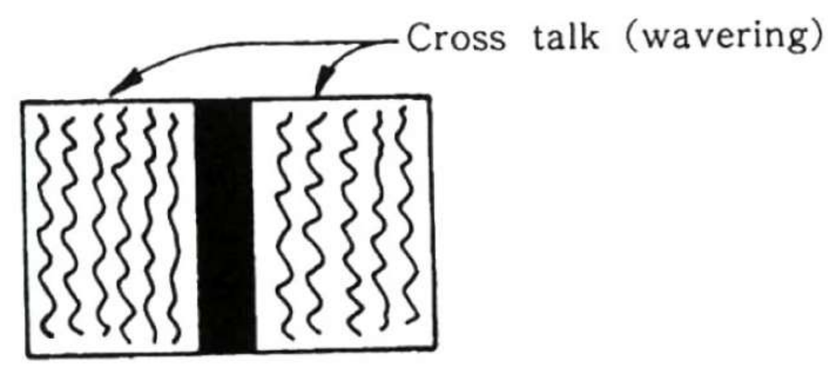

Fig. 7-9.

www.hifiengine.com

4. LD Tracking Gain Adjustment (SV-33 Board)

Mode	Still
Signal	Frame 2201 (GRAY) (REF3P)
Measurement Point	MD adjustment cable CH1 : [TRKG (Y)] (Pin ⑦ of CN105) CH2 : [TRKG (X)] (Pin ③ of CN105)
Measuring Equipment	Oscilloscope (X-Y mode)
Adjusting Element	RV106 (TR GAIN)
Specified Value	See figure below

Connections :

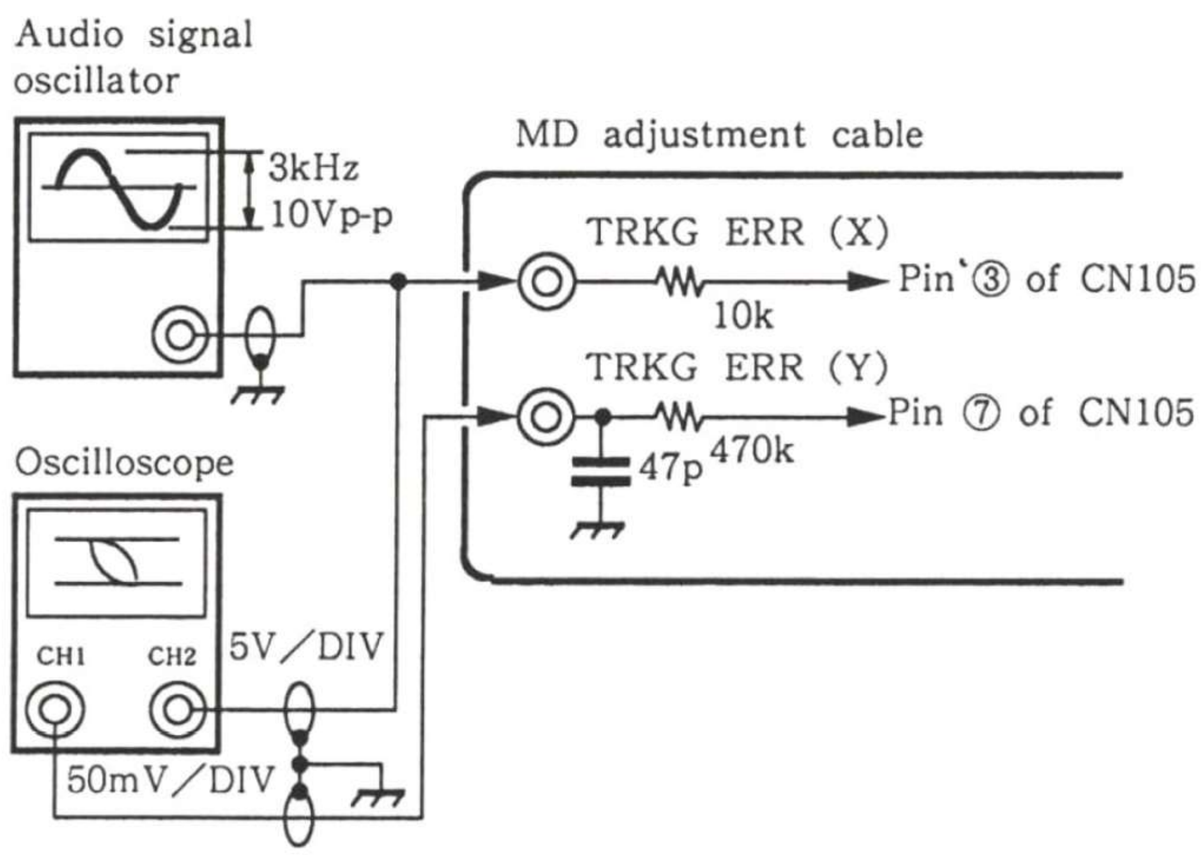

Adjustment method :

1) Search the frame 2201.
2) Adjust the waveform as shown in the figure below with RV 106.

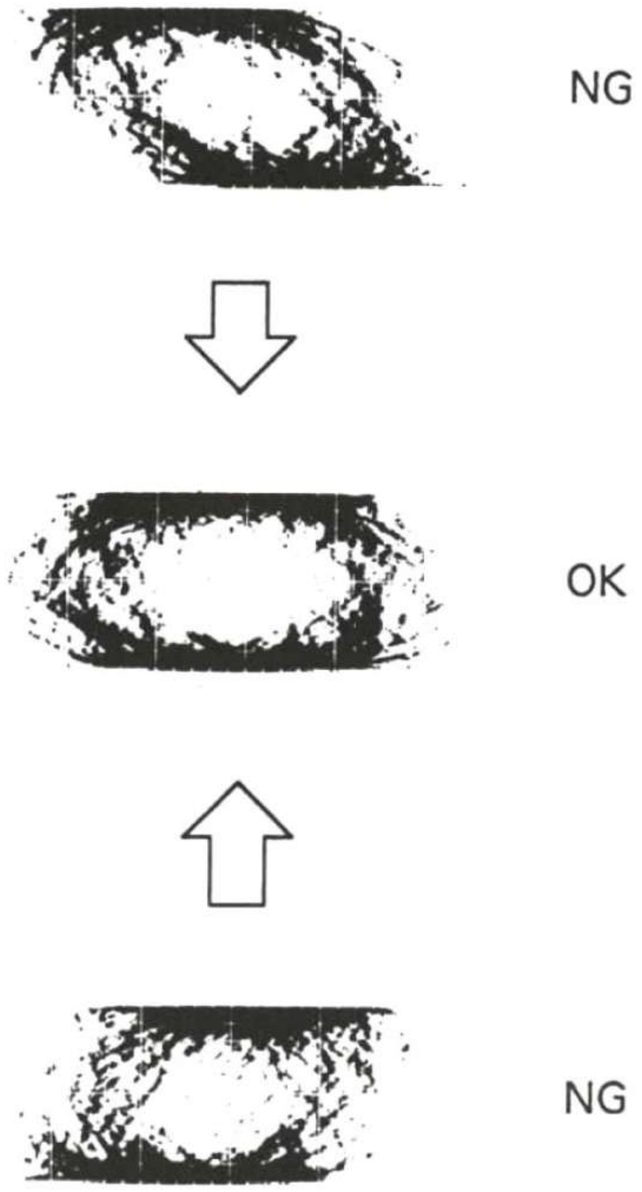

Fig. 7-10.

www.hifiengine.com

1-6-2. CD Servo System Adjustment

1. RD Adjustment

Mode	Pause
Signal	Track No. 1, YEDS-18
Measurement Point	MD adjustment cable CH1 : [E terminal] CH2 : [F terminal]
Measuring Equipment	Oscilloscope
Adjusting Element	RD Cam (MD)
Specified Value	A : B≦10 : 1

Note : 1) Turn off the monitor TV switch to prevent a noise.

Note : 2) Long continuation of the TRKG servo off state causes the spindle motor to stop.

Adjustment method :

1) Play back the track No. 1 and select PAUSE mode.
2) Turn the thread servo off. (MD adjustment cable SLED SW OFF)
3) Turn the tracking servo off. (MD adjustment cable TRKG SW OFF)
4) Turn RD cam on the MD and adjust so that it becomes as a straight line as possible.

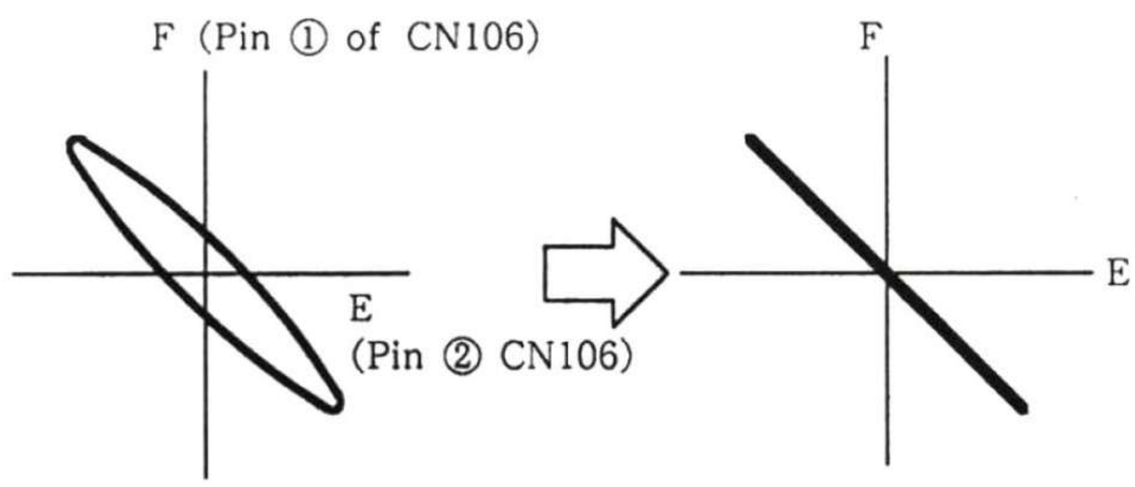

Fig. 7-11.

SV-33 board (CONDUCTOR SIDE)

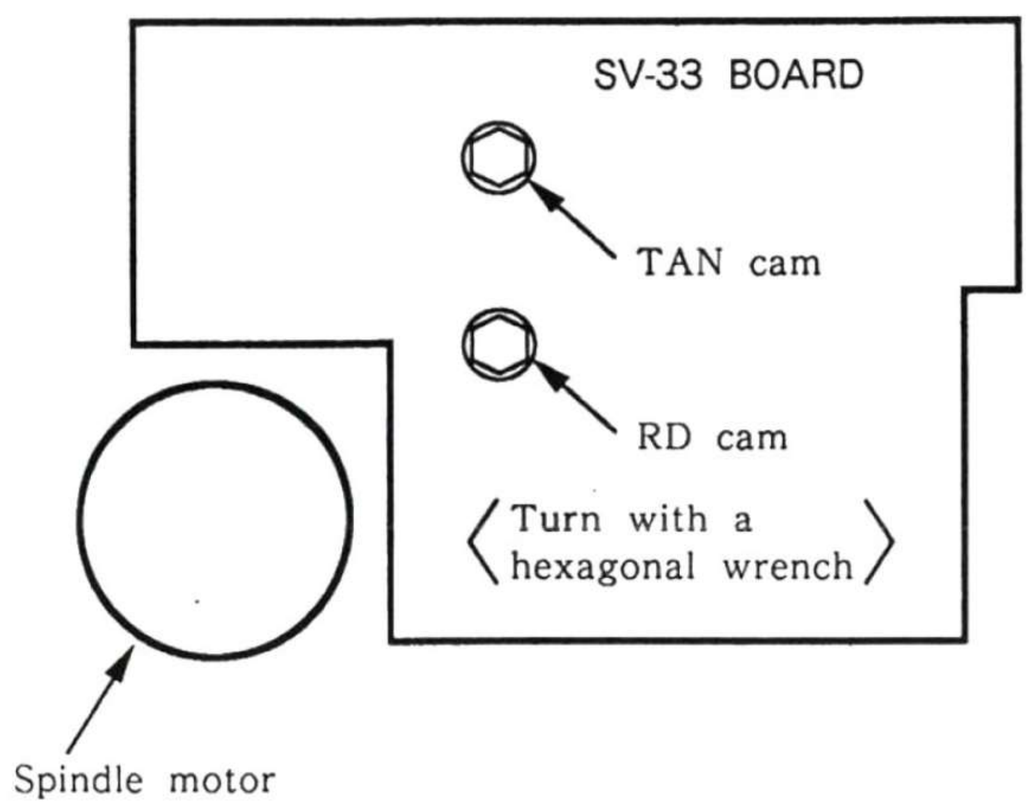

Fig. 7-12.

2. CD Focus Balance Adjustment (SV-33 Board)

Mode	Playback
Signal	Track No. 1, YEDS-18
Measurement Point	MD adjustment cable [RF (CD) OUT] (Pin ⑥ of CN106)
Measuring Equipment	Oscilloscope
Adjusting Element	RV103
Specified Value	Maximum amplitude

Adjustment method :

1) Play back the track No. 1.
2) Adjust with RV103 for maximum level.

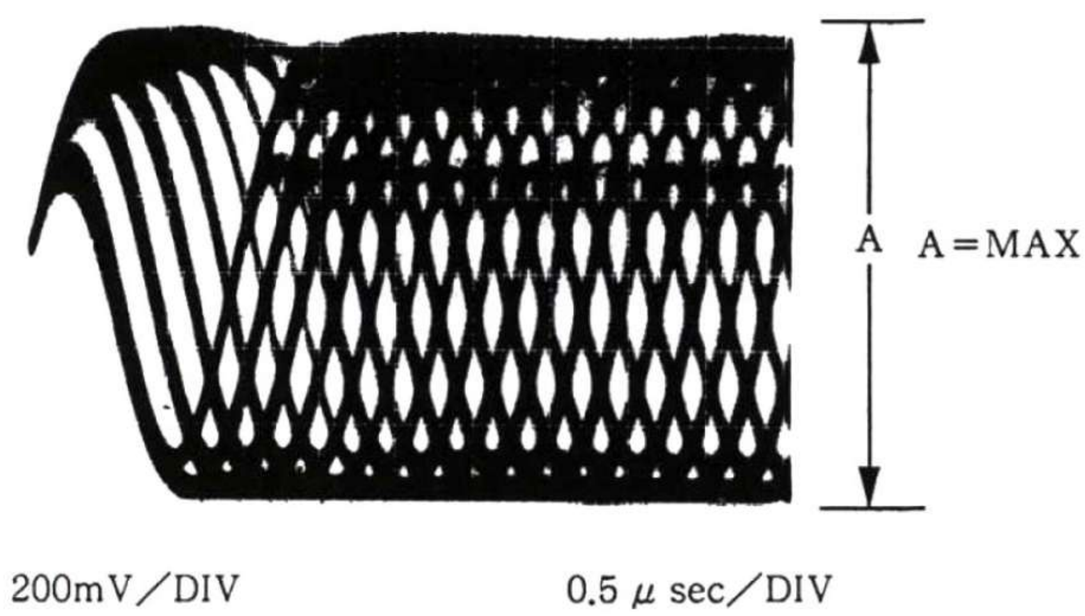

Fig. 7-13.

www.hifiengine.com

3. CD RF H Level Adjustment (SV-33 Board)

Mode	Playback
Signal	Track No. 1, .YEDS-18
Measurement Point	MD adjustment cable [RF (CD) OUT] (Pin ⑥ of CN106)
Measuring Equipment	Oscilloscope
Adjusting Element	RV108
Specified Value	1.2±0.1Vp-p

Adjustment method :

1) Play back the track No. 1.
2) Adjust with RV108 to 1.2±0.1Vp-p.

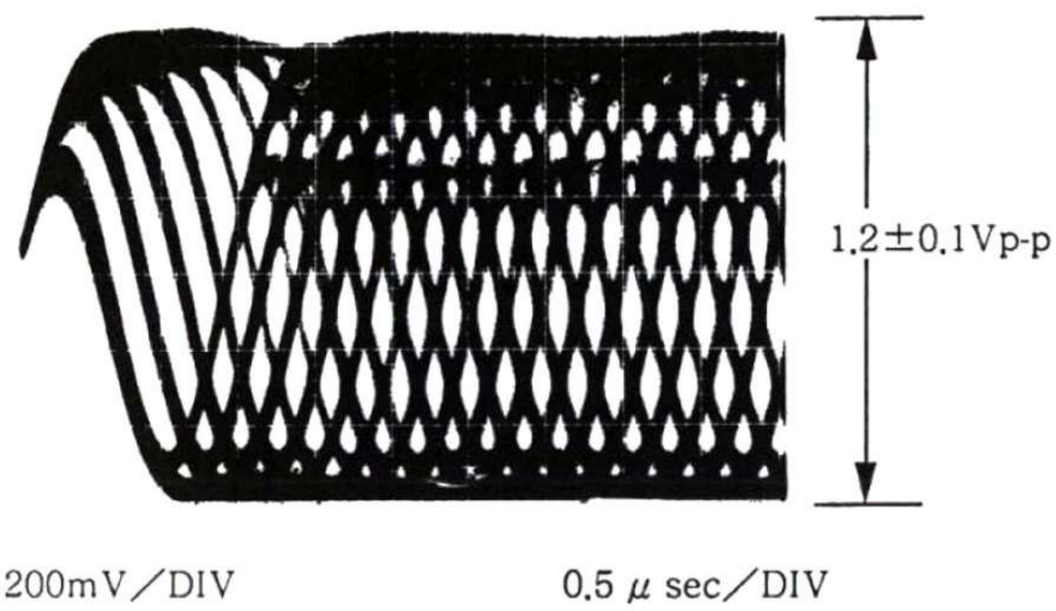

Fig. 7-14.

4. CD RF L Level Adjustment (SV-33 Board)

Mode	Playback
Signal	Track No. 1, YEDS-18
Measurement Point	MD adjustment cable [RF (CD) OUT] (Pin ⑥ of CN106)
Measuring Equipment	Oscilloscope
Adjusting Element	RV104
Specified Value	Clear-cut waveform

Adjustment method :

1) Play back the track No. 1.
2) Adjust with RV104 so that the waveform of lozenge-shaped portions becomes clear-cut and the waveform slant disappear from the rising edge portion.

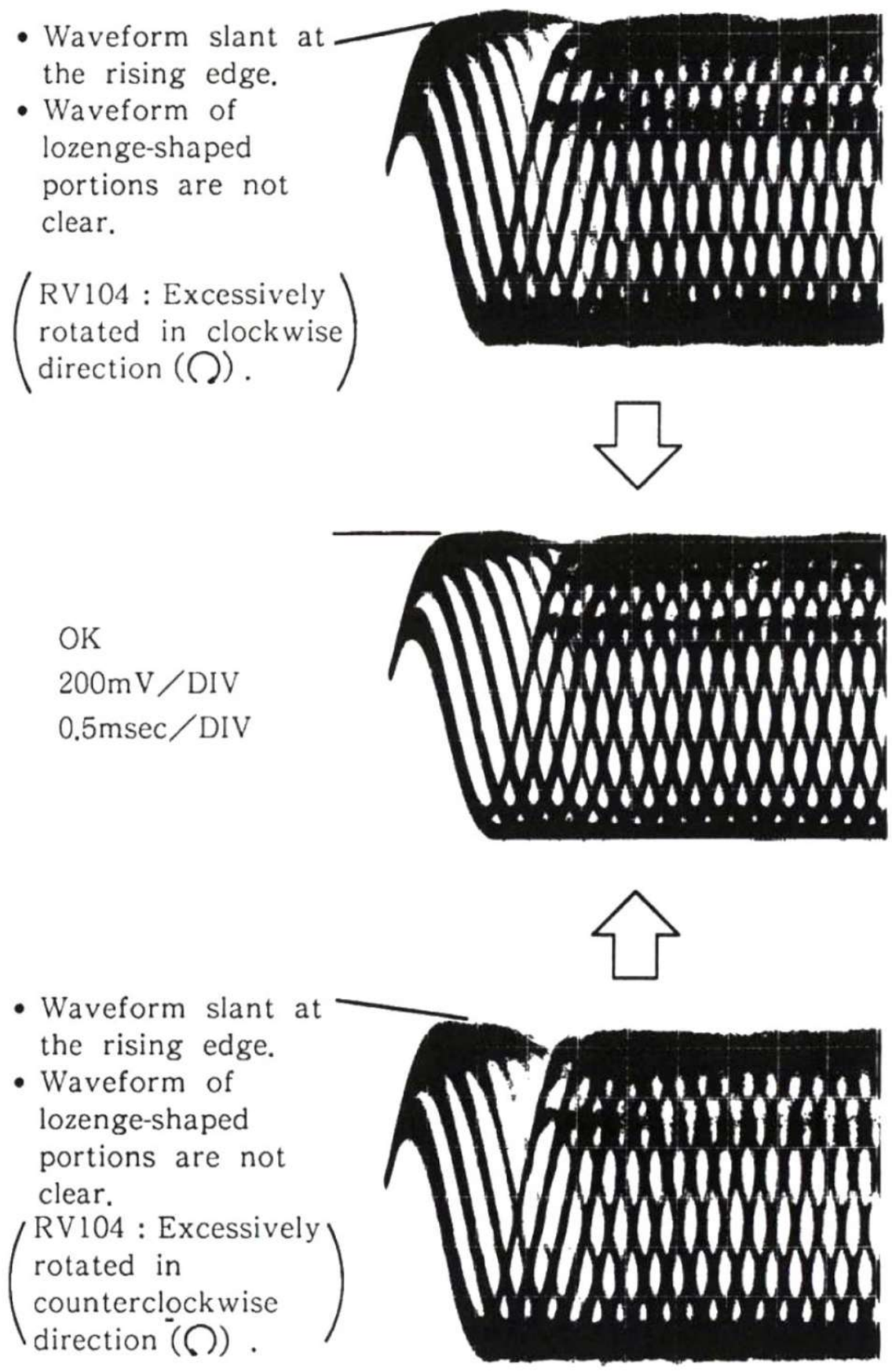

Fig. 7-15.

www.hifiengine.com

1-7. VIDEO SYSTEM ADJUSTMENT

1-7-1. Video Output Level Adjustment (MP-15 Board)

Mode	Still
Signal	Frame 3851 (color bar) (REF3P)
Measurement Point	CNJ102 (VIDEO OUT terminal) (Terminated to 75Ω)
Measuring Equipment	Oscilloscope
Adjusting Element	RV104
Specified Value	1.05 ±0.05Vp-p

Adjustment method:

1) Select STILL (⏭) mode.
2) Search the frame 3851 and apply a color bar signal.
3) Turn RV104 to fully counterclockwise direction.
4) Adjust with RV104 to 1.05±0.05Vp-p on the first adjusting point at turning clockwise direction.

Fig. 7-16.

1-7-2. Burst Gate Position Adjustment (MP-15 Board)

Mode	Still
Signal	Frame 3851 (color bar) (REF3P)
Measurement Point	Pin ㉓ of IC111
Adjusting Element	RV107
Specified Value	8.5±0.2 μsec.

Adjustment method:

1) Select STILL (⏭) mode.
2) Search the frame 3851.
3) Adjust RV107 so that tw becomes 8.5±0.2 μsec.

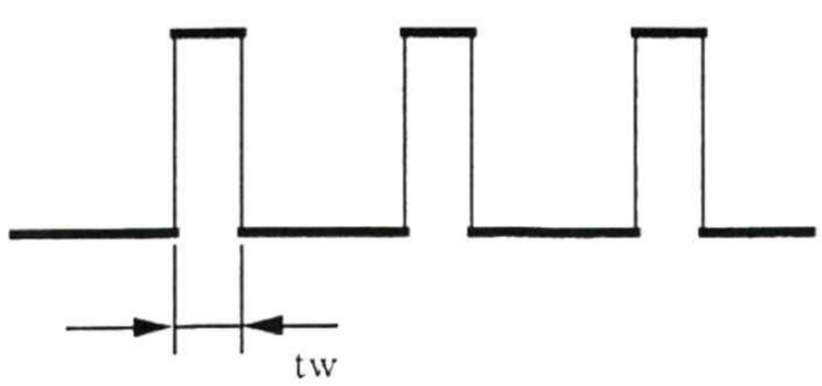

Fig. 7-17.

1-7-3. REF H Adjustment (MP-15 and TL-40 Boards)

Note: Perform [Adjustment 1] and [Adjustment 2] in this order.

Mode	Still
Signal	Frame 3851 (color bar) (REF3P)
Measurement Point	CH1:Pin ㉑ of IC111 External trigger:Pin ㉕ of IC111
Measurement Equipment	Oscilloscope
Adjusting Elements	[Adj.1] RV1 (TL-40 board) [Adj.2] RV105 (MP-15 boad)
Specified Value	[Adj.1] 85± 1 μsec [Adj.2] 22± 1 μsec

Connection:

・Appy 5.0Vdc to Pin ㊵ of IC111.

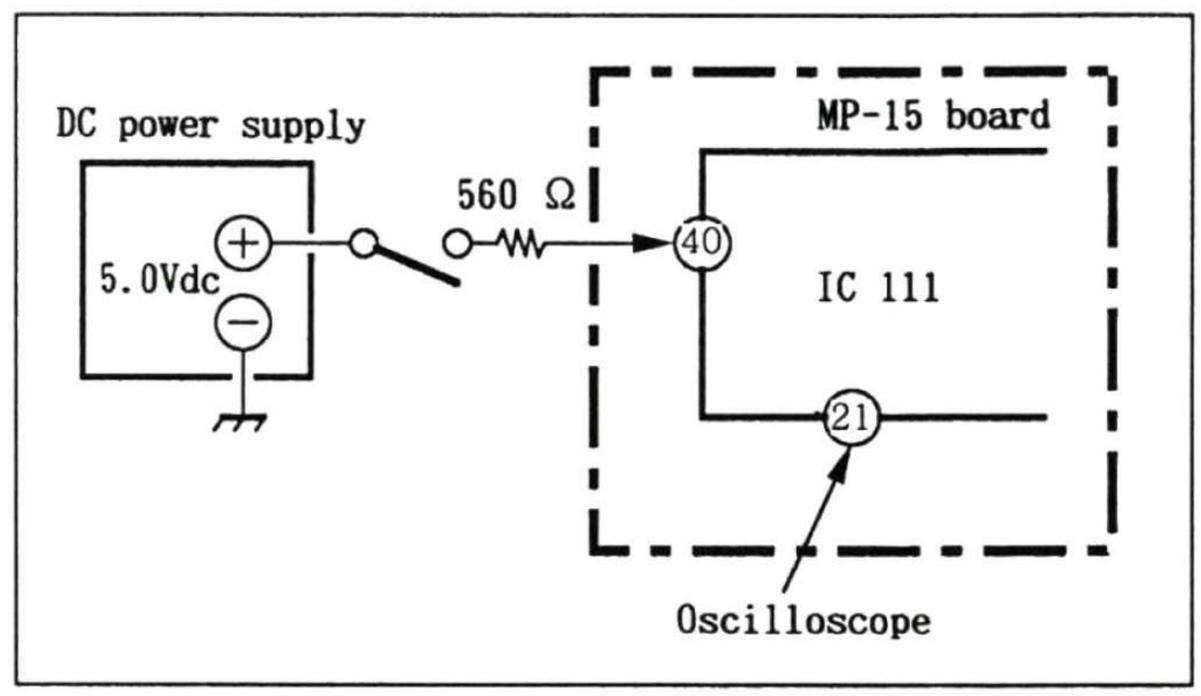

Fig. 7-18.

Adjustment method :

[Adjustment 1]

1) Select STILL (⏭) mode.
2) Search the frame 3851.
3) Connect the DC Power supply (5.0Vdc) to pin ㊵ of IC111.
4) Adjust with RV1 so that rising time difference between the pulse when the power (5.0Vdc) is on (LIM ON) and the trigger pulse (Pin ㉕ of IC111) is 85 ± 1 μsec.

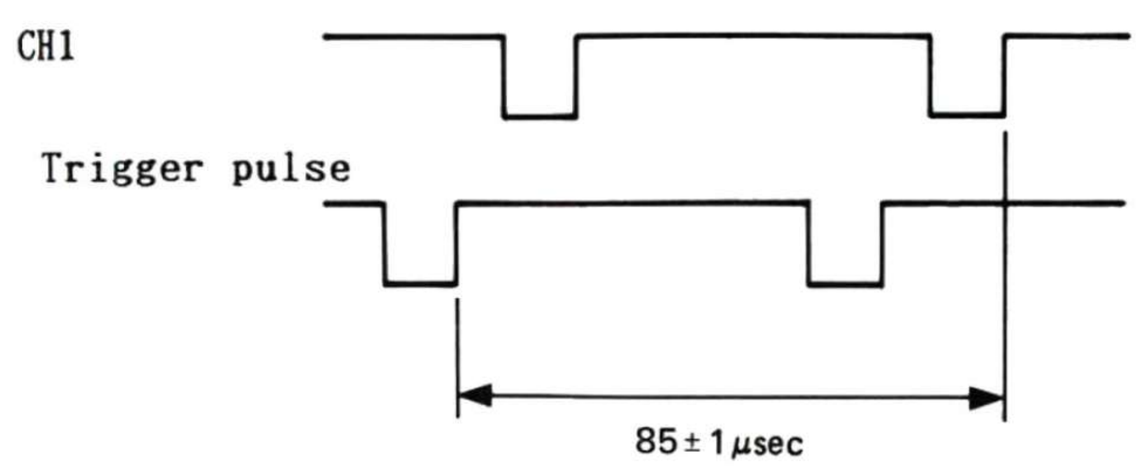

Fig. 7-19.

www.hifiengine.com

[Adjustment 2]

1) Select STILL (⏭) mode.
2) Search the frame 3851.
3) Connect the DC Power supply (5.0Vdc) to pin ㊵ of IC111.
4) Adjust with RV105 so that time difference between when the power (5.0Vdc) is on (LIM ON) and when the power off (LIM OFF) is 22± 1 μsec.

Note : Since the waveform of LIM OFF is wavering, adjust at fits center position.

• Pin ㉑ of IC111 (CH1)

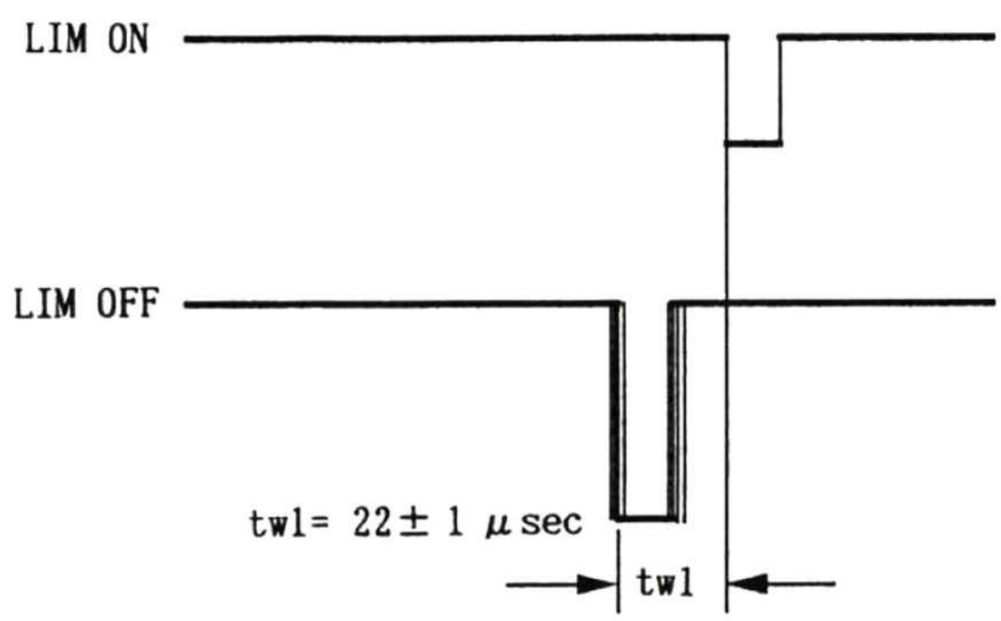

• Pin 25 of IC111 (Trigger pulse)

Fig. 7-20.

1-7-4. Color Framing Y Level Adjustment (MP-15 Board)

Mode	Play back and Still
Signal	Frame 3851 (color bar) (REF3P)
Measurement point	CNJ102 (VIDEO OUT terminal) (Terminated to 75Ω)
Measuring Equipment	Oscilloscope
Adjusting Element	RV102
Specified Value	A=B

Adjustment method :

1) Search the frame 3851.
2) Equalize with RV102 Y levels on the playback mode and the still mode.

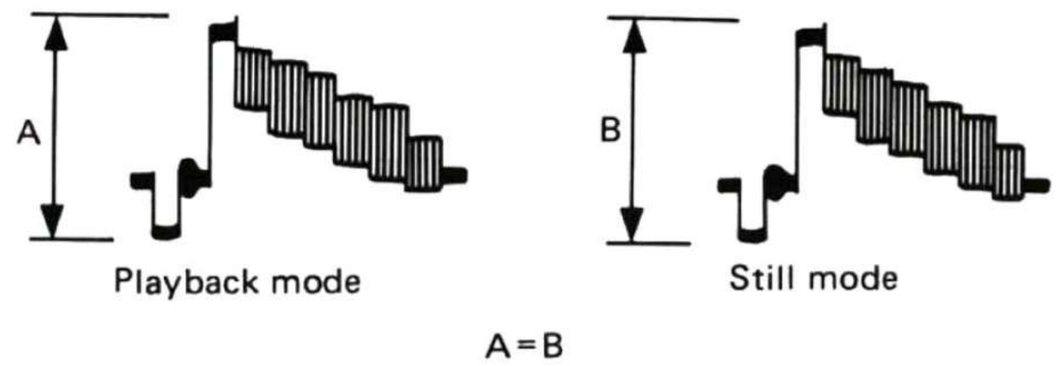

Fig. 7-21.

1-7-5. Color Framing Chroma Level (1) Adjustment (MP-15 Board)

Mode	Still
Signal	Frame 3851 (color bar) (REF3P)
Measurement point	CNJ102 (VIDEO OUT terminal) (Terminated to 75Ω)
Measuring Equipment	Oscilloscope
Adjusting Element	RV103
Specified Value	minimum

Adjustment method :

1) Select STILL (⏭) mode.
2) Search the frame 3851.
3) Minimize with RV103 the shaking of green position.

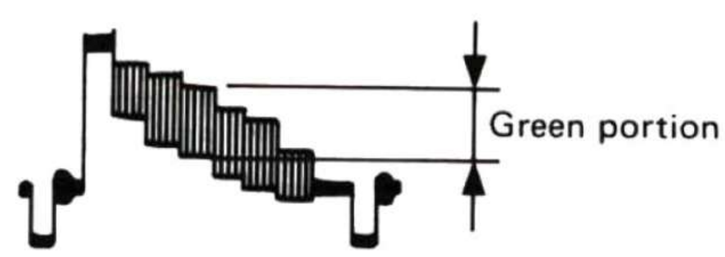

Fig. 7-22.

www.hifiengine.com

1-7-6. Color Framing Chroma Level (2) Adjustment (MP-15 Board)

Mode	Play back and Still
Signal	Frame 3851 (color bar) (REF3P)
Measurement point	CNJ102 (VIDEO OUT terminal) (Terminated to 75Ω)
Measuring Equipment	Oscilloscope
Adjusting Element	RV101
Specified Value	A=B

Adjustment method :

1) Search the frame 3851.
2) Equalize with RV101 the green levels on the playback mode and the still mode.

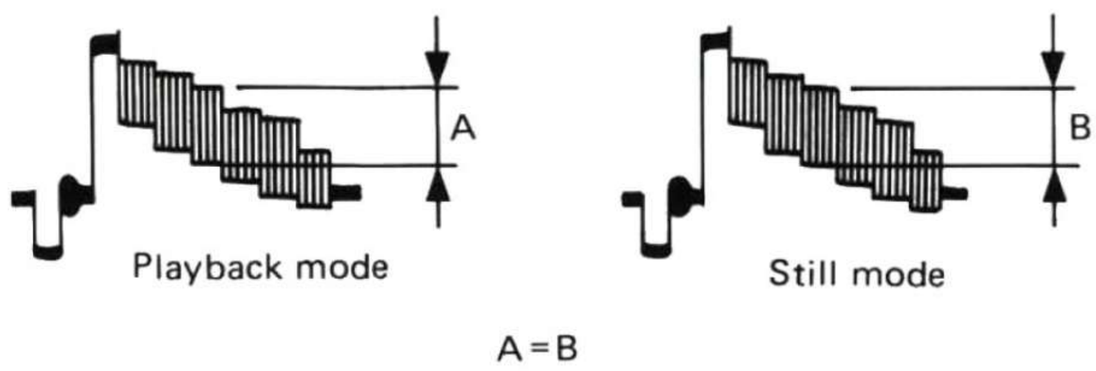

Fig. 7-23.

1-7-7. Color Framing REF H Adjustment (MP-15 Board)

Mode	Still
Signal	Frame 3851 (color bar) (REF3P)
Measurement point	PIN ④ of IC108
Measuring Equipment	Oscilloscope
Adjusting Element	RV106
Specified Value	tw= 112±5msec

Adjustment method :

1) Select STILL (⏭) mode.
2) Search the frame 3851.
3) Adjust with RV106 so that tw is 112±5msec.

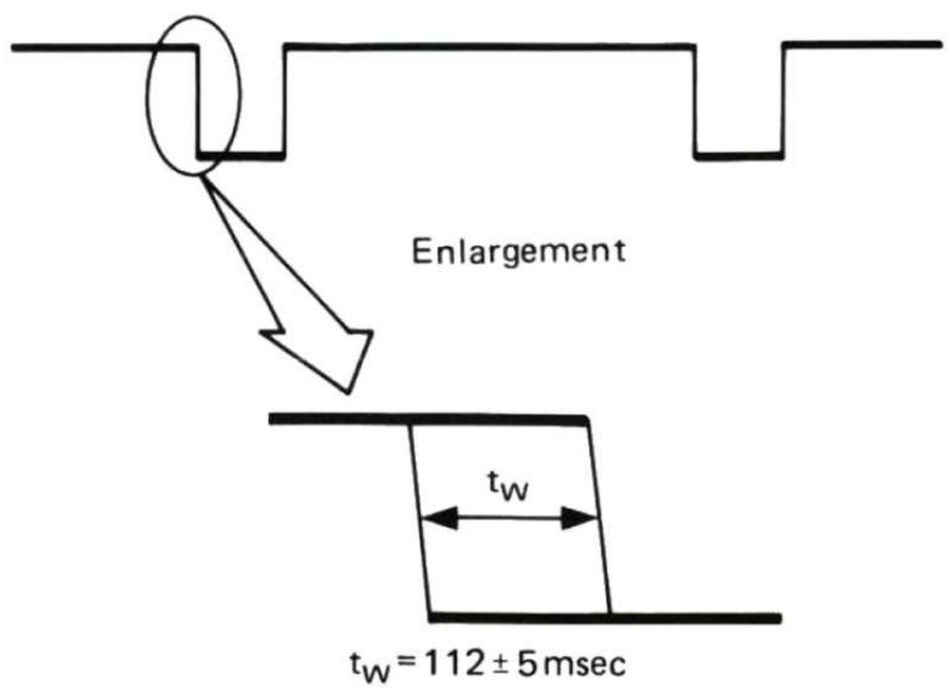

Fig. 7-24.

1-7-8. Input Level (PAL) Adjustment (RG-6 Board)

Mode	Still
Signal	Frame 3851 (color bar) (REF3P)
Measurement point	PIN ㉔ of IC103
Measuring Equipment	Oscilloscope
Adjusting Element	RV101
Specified Value	150±10mVp-p

Adjustment method :

1) Select STILL (⏭) mode.
2) Search the frame 3851 .
3) Adjust with RV101 to 150±10mVp-p.

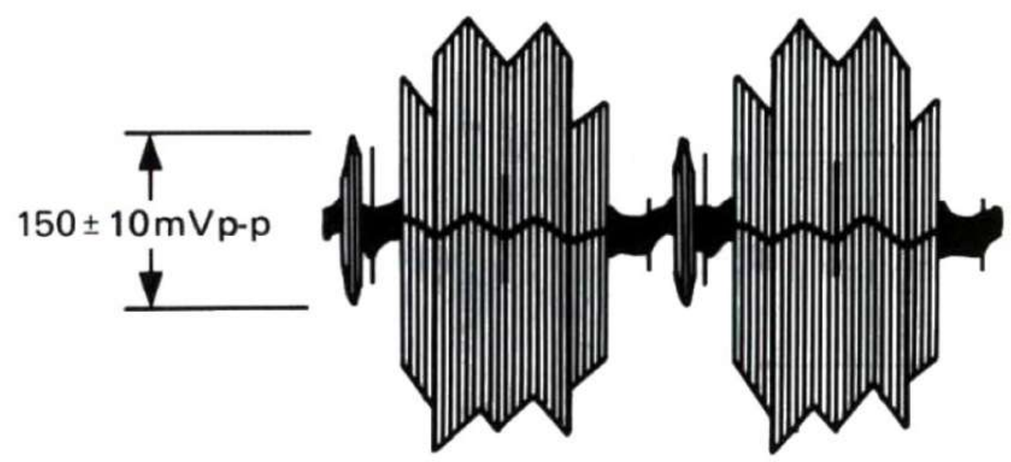

Fig. 7-25.

www.hifiengine.com

1-7-9. Input Level (NTSC) Adjustment (RG-6 Board)

Mode	Still
Signal	Frame 4100 (color bar) (REF7)
Measurement point	PIN ㉔ of IC103
Measuring Equipment	Oscilloscope
Adjusting Element	RV103
Specified Value	150±10mVp-p

Adjustment method :

1) Select STILL (⏭) mode.
2) Search the frame 4100.
3) Adjust with RV103 to 150±10mVp-p.

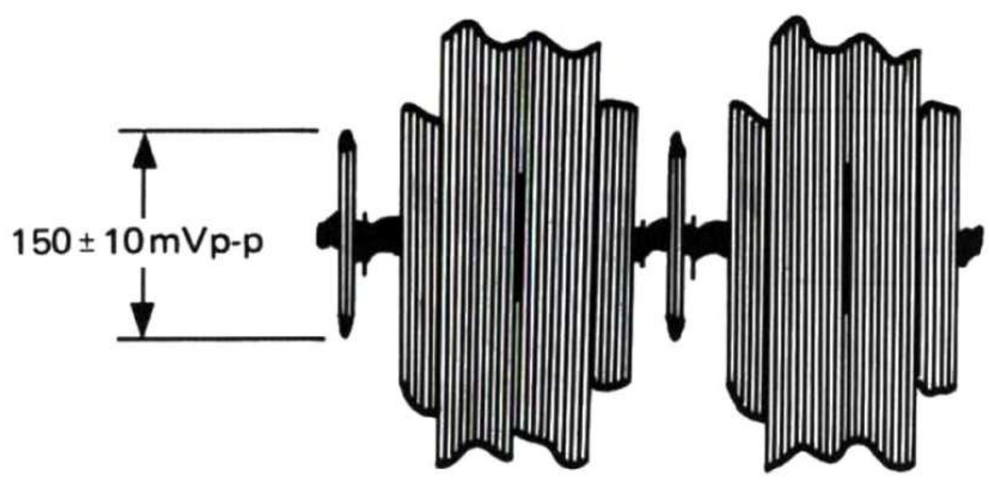

Fig. 7-26.

1-7-10. BF Position Adjustment (RG-6 Board)

Mode	Still
Signal	Frame 4100 (color bar) (REF7)
Measurement point	CH1:Pin ㉗ of IC 103 CH2:Pin ③ of IC103
Measuring Equipment	Oscilloscope
Adjusting Element	RV107
Specified Value	5.6±0.5 μsec

Adjustment method :

1) Select STILL (⏭) mode.
2) Search the frame 4100.
3) Adjust with RV107 to 5.6±0.5 μsec.

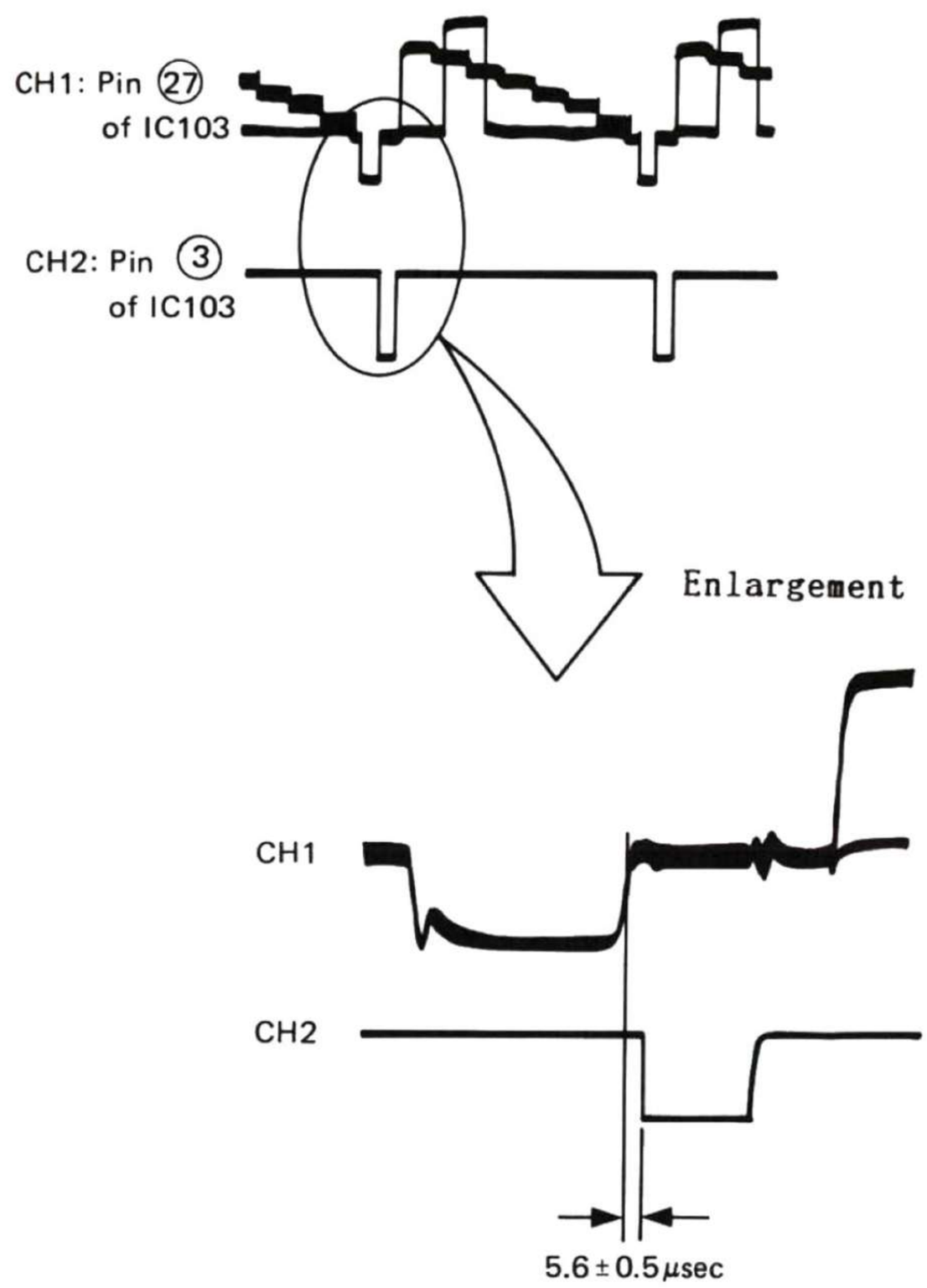

Fig. 7-27.

www.hifiengine.com

1-7-11. Video Level (NTSC) Adjustment (RG-6 Board)

Mode	Still
Signal	Frame 4100 (color bar) (REF7)
Measurement point	CH1:Pin ⑤ of CN101 (Terminated to 75Ω)
Measuring Equipment	Oscilloscope
Adjusting Element	RV104
Specified Value	0.7±0.05Vp-p

Adjustment method :
1) Select STILL (⏭) mode.
2) Search the frame 4100.
3) Adjust with RV104 to 0.7±0.05Vp-p.

Fig. 7-28.

1-7-12. G Level Adjustment (RG-6 Board)

Mode	Still
Signal	Frame 4100 (color bar) (REF7)
Measurement point	Pin ⑥ of CN101 (Terminated to 75Ω)
Measuring Equipment	Oscilloscope
Adjusting Element	RV111
Specified Value	0.7±0.05Vp-p

Adjustment method :
1) Select STILL (⏭) mode.
2) Search the frame 4100.
3) Adjust with RV111 to 0.7±0.05Vp-p.

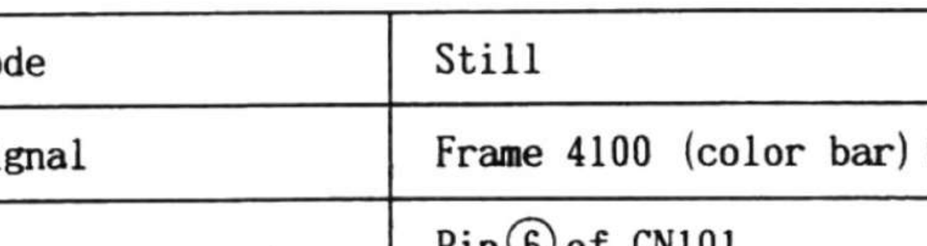

Fig. 7-29.

1-7-13. B Level Adjustment (RG-6 Board)

Mode	Still
Signal	Frame 4100 (color bar) (REF7)
Measurement point	Pin ⑦ of CN101 (Terminated to 75Ω)
Measuring Equipment	Oscilloscope
Adjusting Element	RV110
Specified Value	0.7±0.05Vp-p

Adjustment method :
1) Select STILL (⏭) mode.
2) Search the frame 4100.
3) Adjust with RV110 to 0.7±0.05Vp-p.

Fig. 7-30.

1-7-14. Video Level (PAL) Adjustment (RG-6 Board)

Mode	Still
Signal	Frame 3851 (color bar) (REF3P)
Measurement point	Pin ⑤ of CN101 (Terminated to 75Ω)
Measuring Equipment	Oscilloscope
Adjusting Element	RV102
Specified Value	0.7±0.05Vp-p

Adjustment method :
1) Select STILL (⏭) mode.
2) Search the frame 3851.
3) Adjust with RV102 to 0.7±0.05Vp-p.

Fig. 7-31.

www.hifiengine.com

1-7-15. Free-Run Frequency (PAL) Adjustment (RG-6 Board)

Mode	Playback
Signal	Any Signal (REF3P)
Measurement point	Pin ⑭ of IC 103
Measuring Equipment	Frequency Counter
Adjusting Element	RV108
Specified Value	4,433,619±15Hz

Adjustment method :

1) Playback the REF3P disc.
2) Adjust with RV108 to 4,433,619±15Hz.

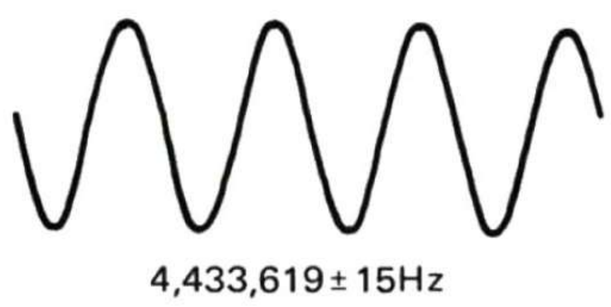

Fig. 7-32.

1-7-16. Free-Run Frequency (NTSC) Adjustment (RG-6 Board)

Mode	Playback
Signal	Any Signal (REF7)
Measurement point	Pin ⑭ of IC 103
Measuring Equipment	Frequency Counter
Adjusting Element	CV102
Specified Value	3,579,545±15Hz

Adjustment method :

1) Playback the REF7 disc.
2) Adjust with CV102 to 3,579,545±15Hz.

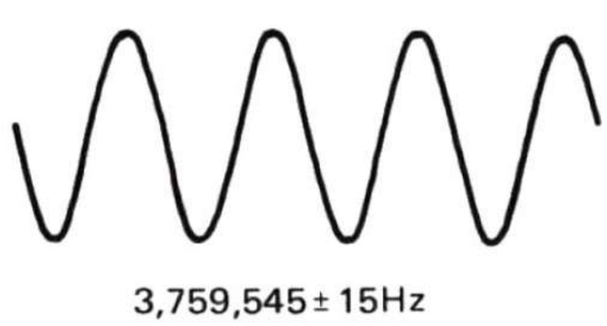

Fig. 7-33.

1-7-17. Chroma Level Adjustment (RG-6 Board)

Mode	Still
Signal	Frame 4100 (color bar) (REF7)
Measurement point	Pin ⑦ of CN101 (Terminated to 75Ω)
Measuring Equipment	Oscilloscope
Adjusting Element	RV105
Specified Value	0.53 ±0.03Vp-p

Adjustment method :

1) Select STILL (⏭) mode.
2) Search the frame 4100.
3) Adjust with RV105 to 0.53±0.03Vp-p.

Fig. 7-34.

1-7-18. HUE Adjustment (RG-6 Board)

Mode	Still
Signal	Frame 4100 (color bar) (REF7)
Measurement point	Pin ⑦ of CN101 (Terminated to 75Ω)
Measuring Equipment	Oscilloscope
Adjusting Element	RV109
Specified Value	A=B=C= 0.53±0.03Vp-p

Adjustment method :

1) Select STILL (⏭) mode.
2) Search the frame 4100.
3) Adjust with RV109 to 0.53±0.03Vp-p.

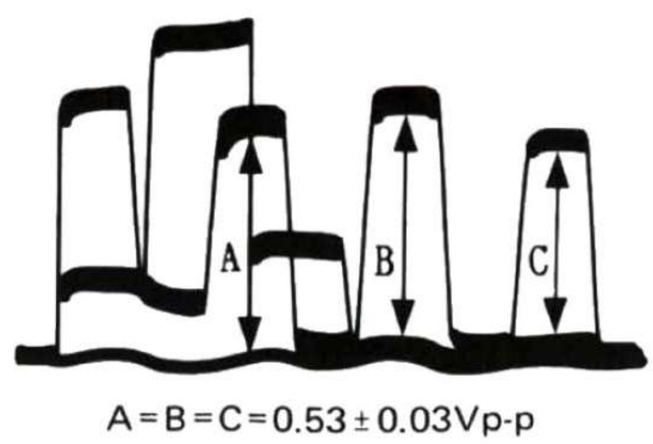

Fig. 7-35.

www.hifiengine.com

1-7-19. DL Amplifier Gain Adjustment (RG-6 Board)

Mode	Still
Signal	Frame 3851 (color bar) (REF3P)
Measurement point	Pin⑤of CN101 (Terminated to 75Ω)
Measuring Equipment	Oscilloscope
Adjusting Element	RV106
Specified Value	A=B= 0.53±0.03Vp-p

Adjustment method :

1) Select STILL (⏭) mode.
2) Search the frame 3851.
3) Adjust with RV106 to 0.53±0.03Vp-p.

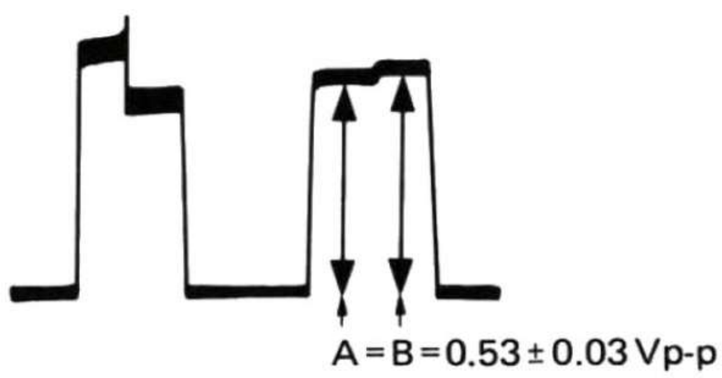

Fig. 7-36.

1-7-20. DAT Adjustment (RG-6 Board)

Mode	Still
Signal	Frame 3851 (color bar) (REF3P)
Measurement point	Pin⑦of CN101 (Terminated to 75Ω)
Measuring Equipment	Oscilloscope
Adjusting Element	LV101
Specified Value	A− B ≦30mV

Adjustment method :

1) Select STILL (⏭) mode.
2) Search the frame 3851.
3) Adjust with LV101 to A− B ≦30mV.

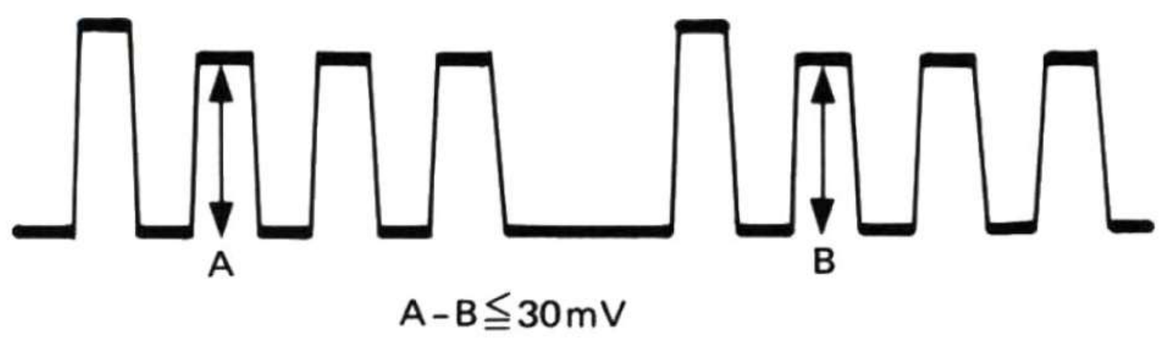

Fig. 7-37.

www.hifiengine.com

1-8. AUDIO SYSTEM ADJUSTMENT

1-8-1. Analog Audio System Adjustment (AF-52 Board)

1. Audio output level adjustment (MDP-515)

Note: Adjusting element of the 2/R channel is indicated in brackets [ ] .

Mode	Still
Signal	Frame 4301 (RAMP/1kHz) (REF3P) Frame 4301 (RAMP/1kHz) (REF7)
Measurement point	Audio output 1/L [2/R] terminal
Measuring Equipment	Audio level meter or Oscilloscope
Adjusting Element	RV701 [RV702] (NTSC) RV703 [RV704] (PAL)
Specified Value	Audio level meter:500±25mVrms Osilloscope : 1.4±0.07Vp-p

Adjustment method :

1) Playback the REF7 disc.
2) Search the Frame 4301 (chapter 6)
3) Turn off the CX with remote commander.
   (Confirm that the indication on the front panel of the main unit is disappeared.)
4) Adjust with RV701 [RV702] to 500±25mVrms or 1.4±0.07Vp-p.
5) Playback the REF3P disc.
6) Search the Frame 4301 (chapter 6)
7) Turn off the CX with remote commander.
   (Confirm that the indication on the front panel of the main unit is disappeared.)
8) Adjust with RV703 [RV702] to 500±25mVrms or 1.4±0.07Vp-p.

2. Audio output level adjustment (MDP-315)

Note: Adjusting element of the 2/R channel is indicated in brackets [ ] .

Mode	Playback
Signal	Frame 4301 (RAMP/1kHz) (REF3P)
Measurement point	Audio output 1/L [2/R] terminal
Measuring Equipment	Audio level meter or Oscilloscope
Adjusting Element	RV701 [RV702]
Specified Value	Audio level meter:500±25mVrm Osilloscope : 1.4±0.07Vp-p

Adjustment method :

1) Playback the REF3P disc.
2) Search the Frame 4301 (chapter 6)
3) Turn off the CX with remote commander.
   (Confirm that the indication on the front panel of the main unit is disappeared.)
4) Adjust with RV701 [RV702] to 500±25mVrms or 1.4 ±0.07Vp-p

1-8-2. Digital Audio System Adjustment (MP-15 Board)

Mode	Stop
Measurement point	Pin①of IC803
Measuring Equipment	Digital Voltmeter
Adjusting Element	RV801
Specified Value	0±0.2Vdc

Connections:

Connect the chemical capacitor(1μF or more) in between Pin⑤of IC803(EFM) and GND.

Adjustment method :

1) Adjust with RV801 so that the voltage at Pin①of IC803 is 0±0.2Vdc.

www.hifiengine.com

1-8-3. RF PLL Free-Run Adjustment (MP-15 Board)

Mode	Stop
Measurement point	Pin ⑦⓪ of IC803
Measuring Equipment	Frequency counter
Adjusting Element	LV801
Specified Value	4.405±0.005MHz

Connections:
Connect the chemical capacitor (1μF or more) in between Pin ⑤ (EFM) of IC803 and GND.

Adjustment method :
1) Adjust with LV001 to 4.405 ±0.005MHz.

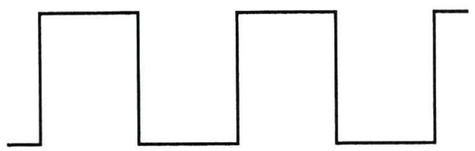

Fig. 7-38.

Note: If adjusting with a metallic screwdriver, a reading value may be altered. So use a ceramic screwdriver.

ADJUSTMENT RELATED PARTS LOCATION

MP-15 BOARD (CONDUCTOR SIDE)

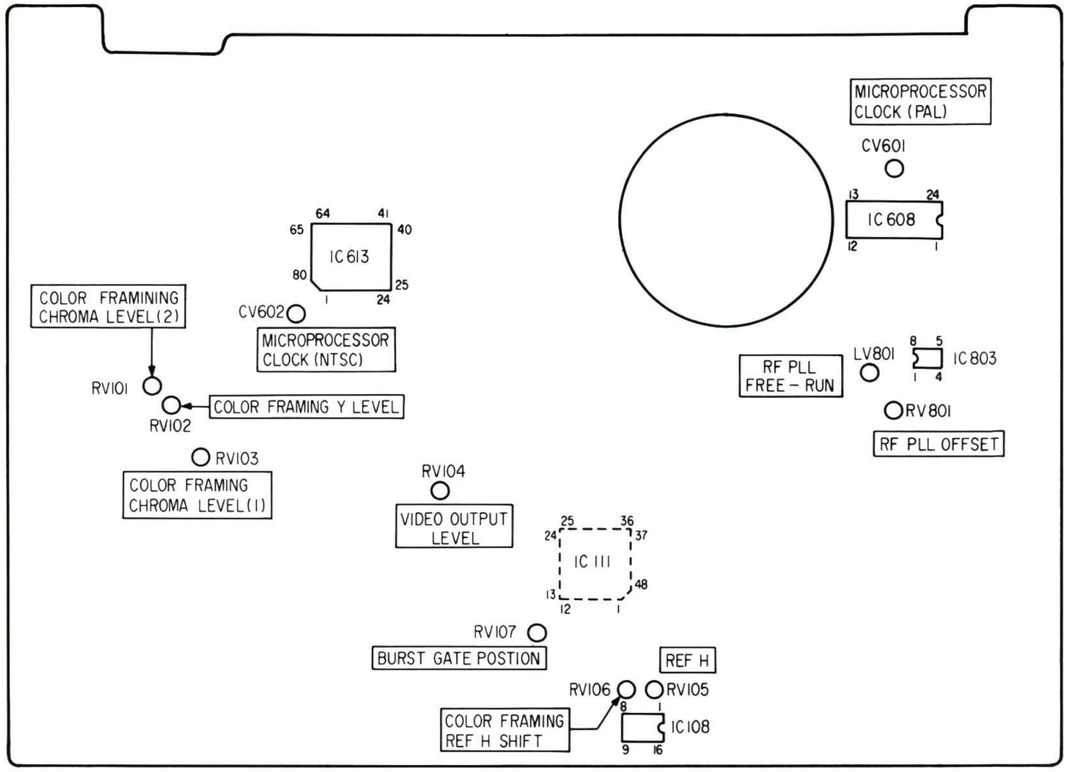

RG-6 BOARD (COMPONENT SIDE)

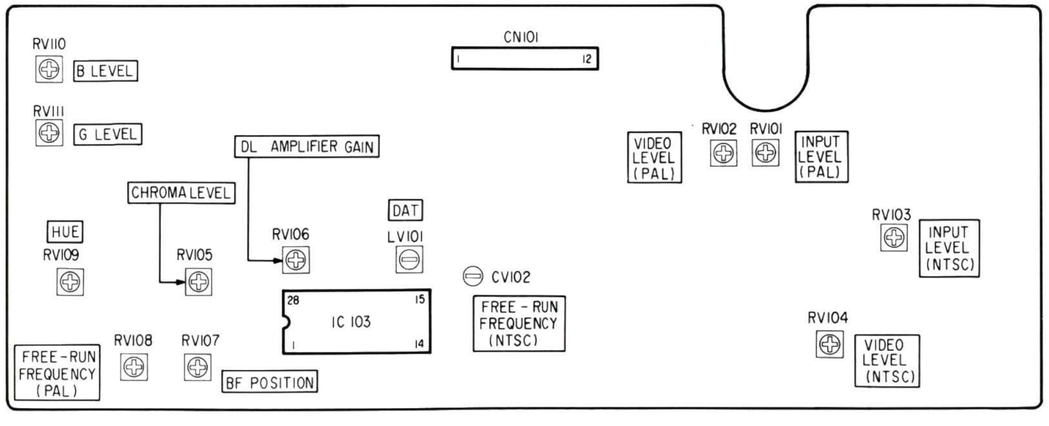

AF-52 BOARD (CONDUCTOR SIDE)

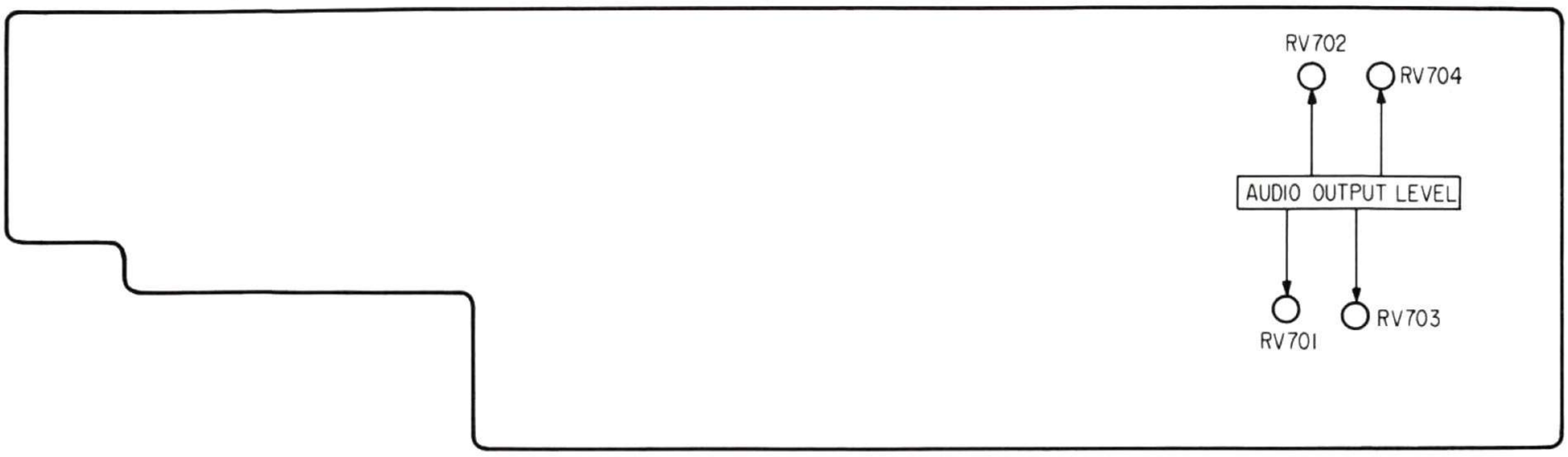

SV-33 board **(CONDUCTOR SIDE)**

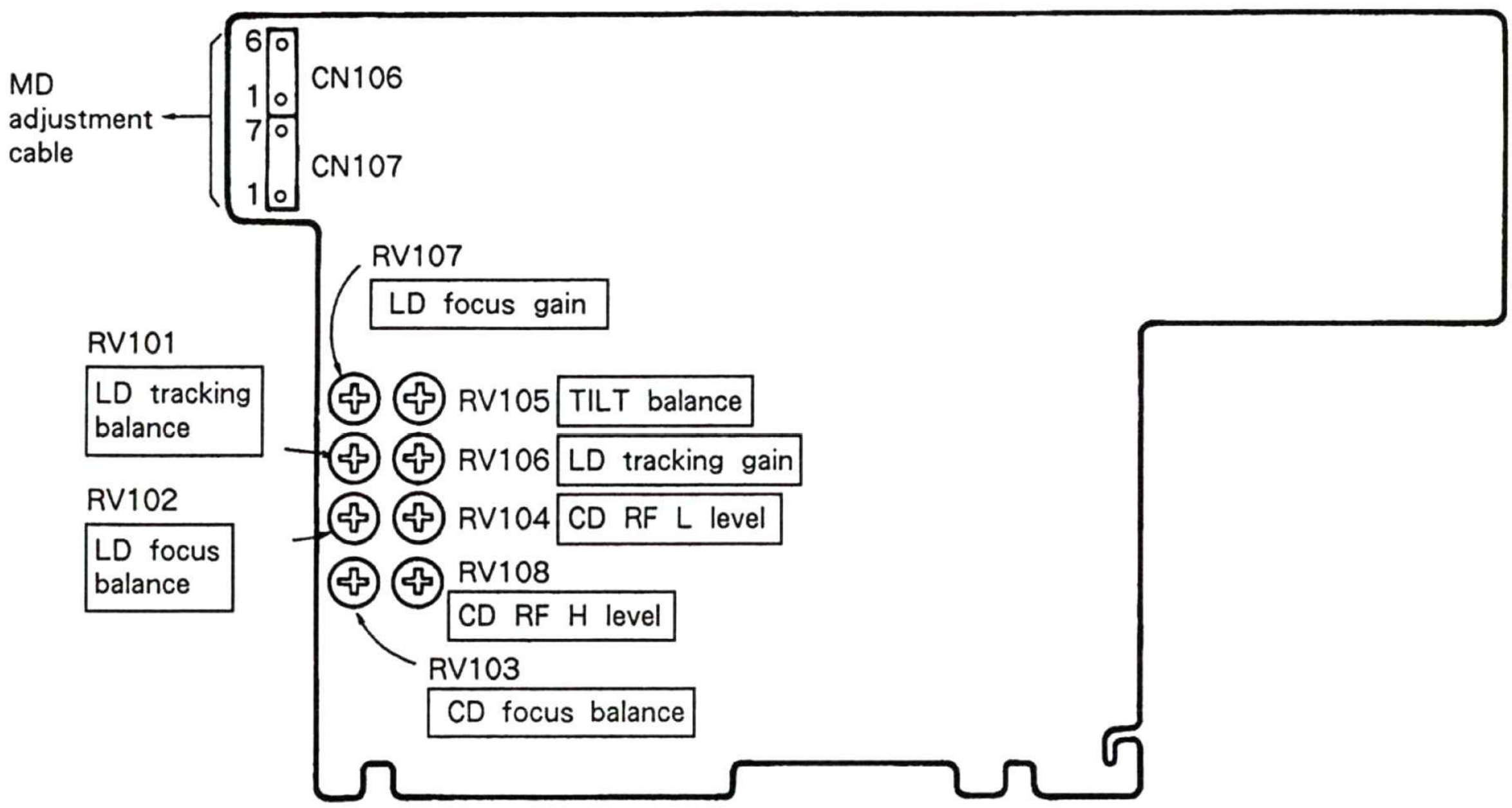

PS-193 board **(CONDUCTOR SIDE)**

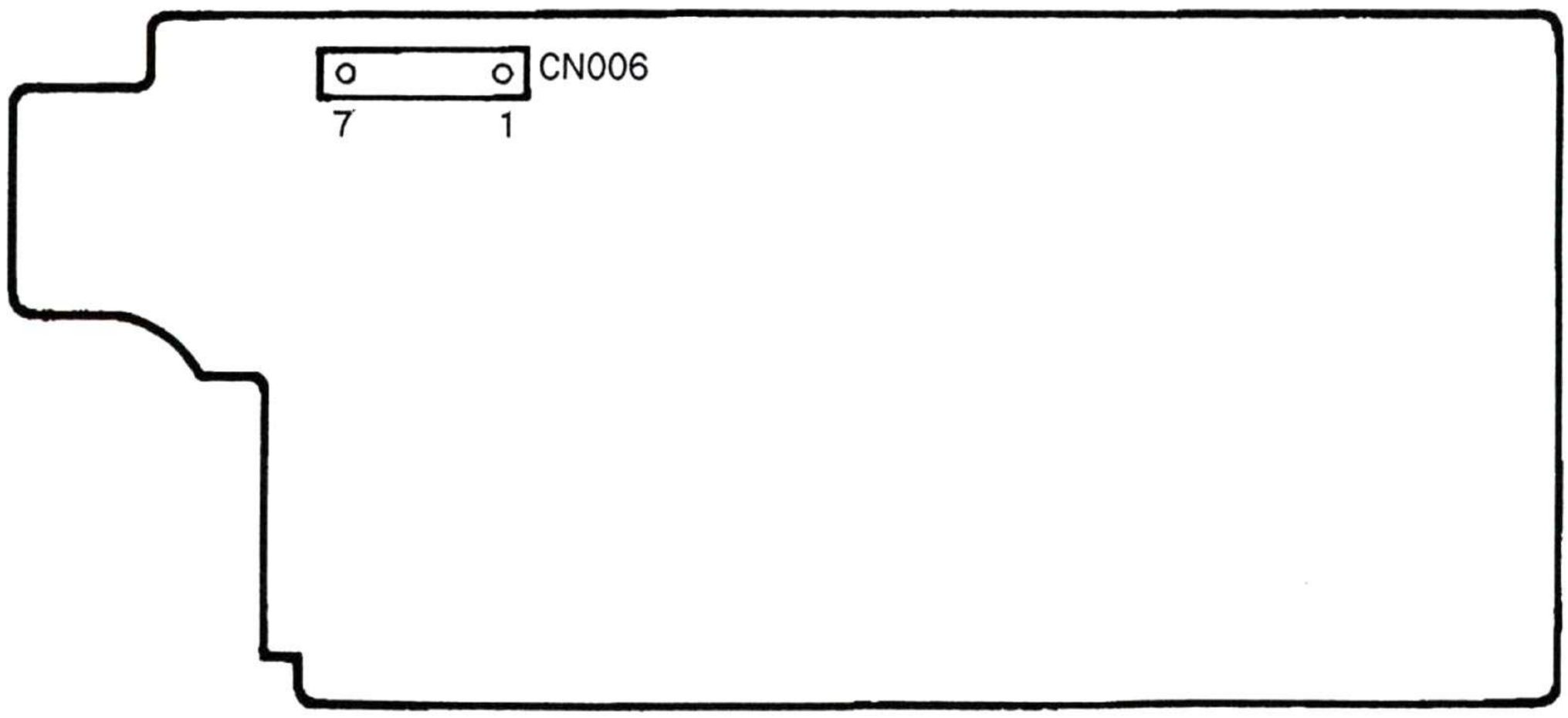

www.hifiengine.com

www.hifiengine.com

www.hifiengine.com

English
8910628-1
Printed in Japan

Sony Corporation
Home Video Group

www.hifiengine.com

MDP-315/515D
RMT-515D

SONY®
SERVICE MANUAL

AEP Model
MDP-315/515D
Australian Model
MDP-515D

CORRECTION-2

File this Correction with the Service Manual.

SUBJECT

TR-30 BOARD
• PRINTED WIRING BOARD AND SCHEMATIC DIAGRAMS

INTRODUCTION
The TR-30 board have been changed.

www.hifiengine.com

SECTION 4 PRINTED WIRING BOARDS AND SCHEMATIC DIAGRAMS : Page 95, 97

☛ : Corrected portion

Page	Incorrect	Correct
95	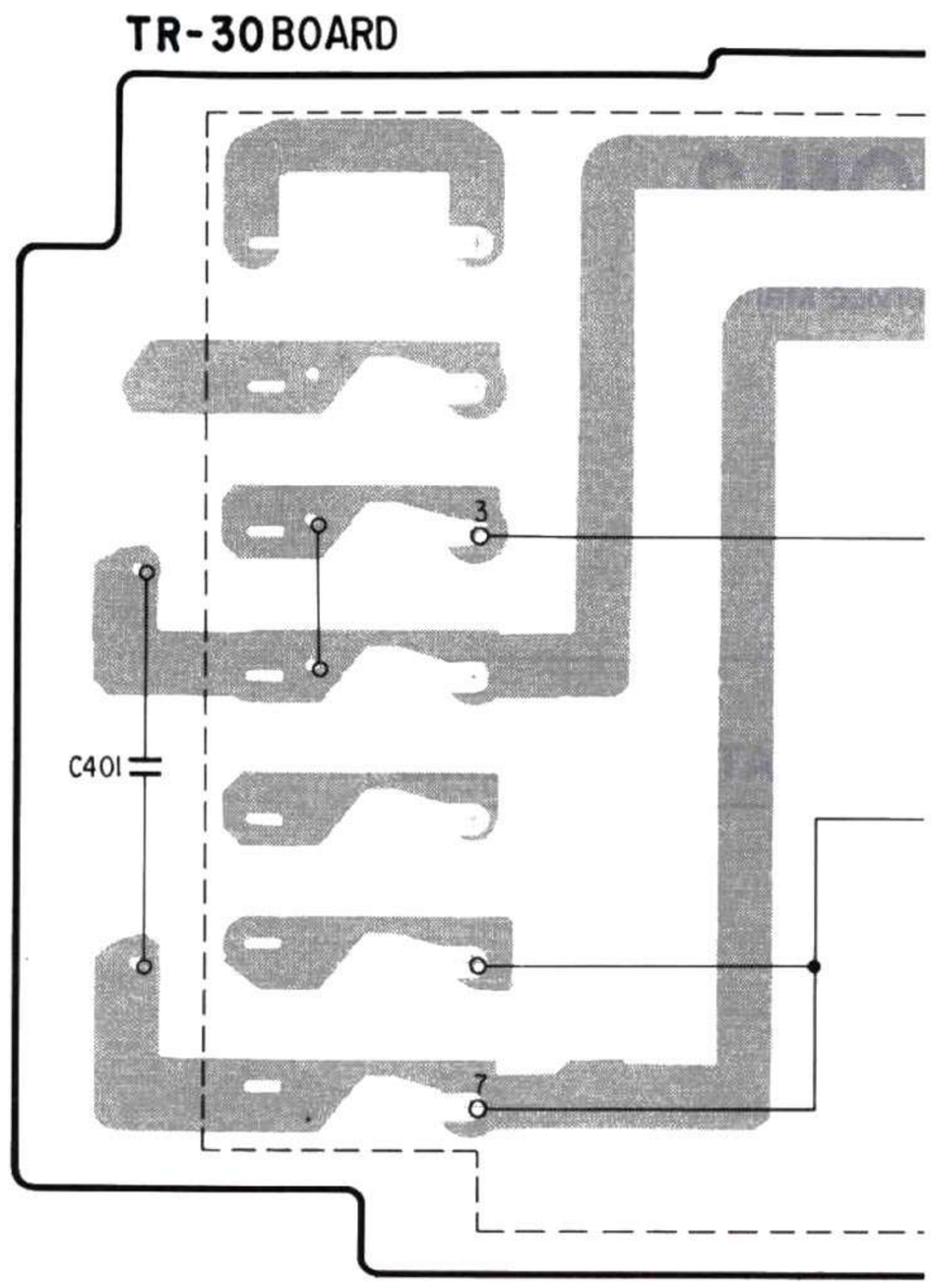	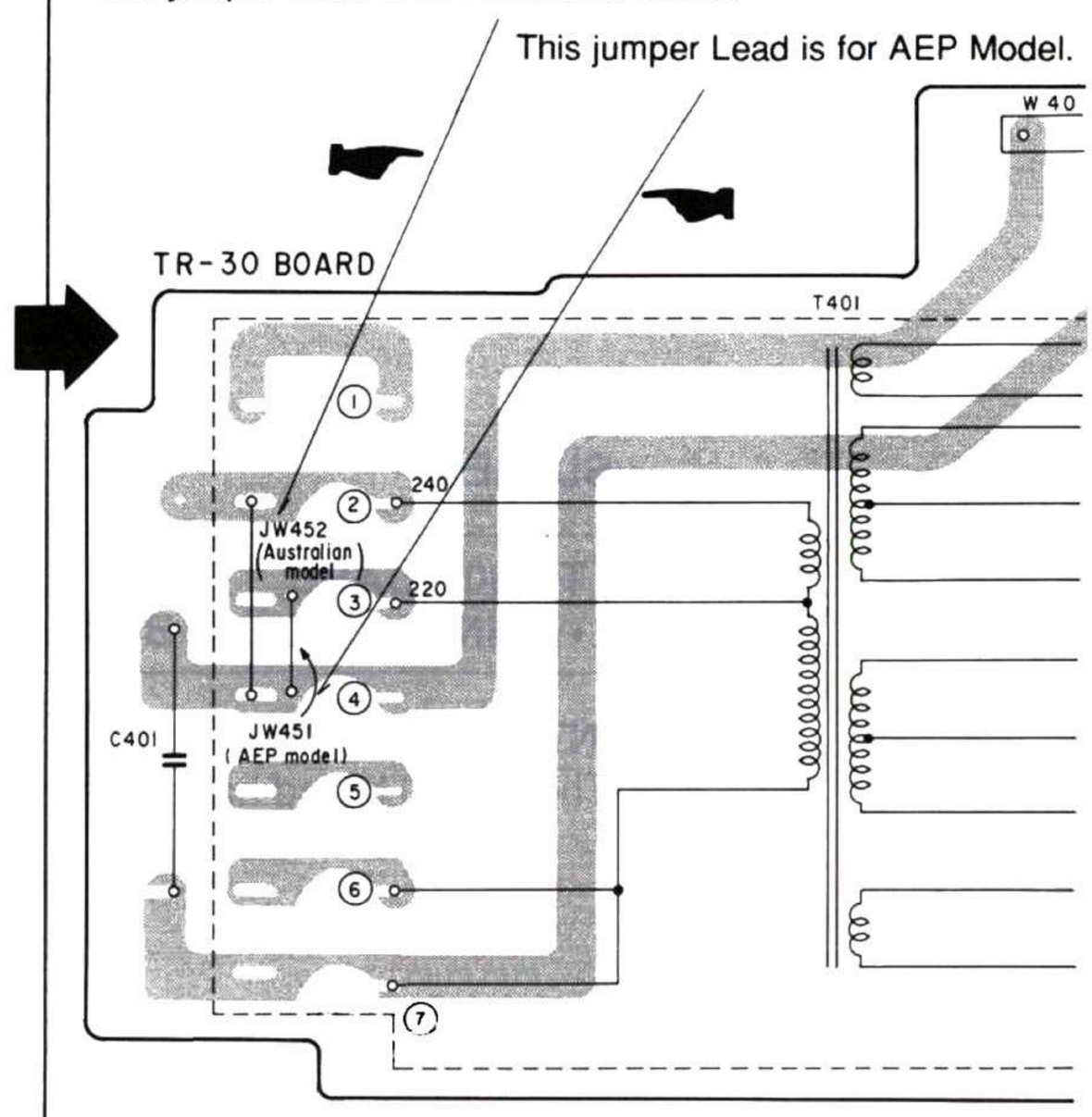
97	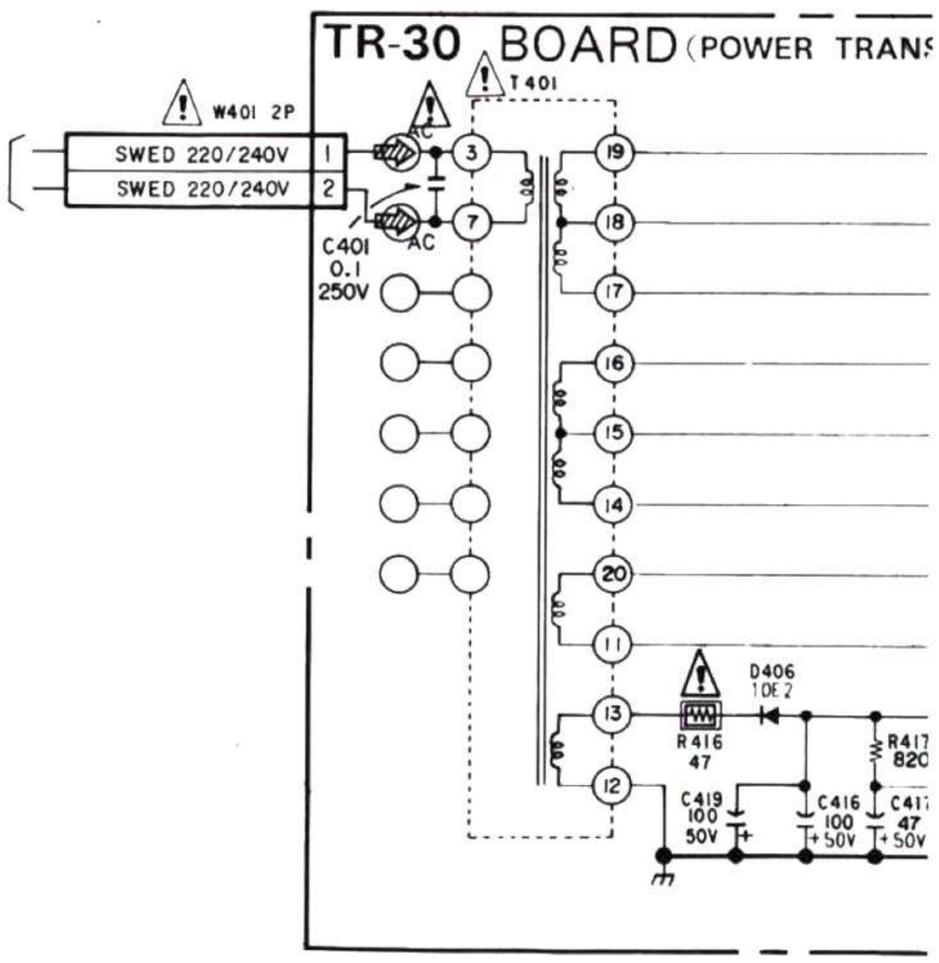	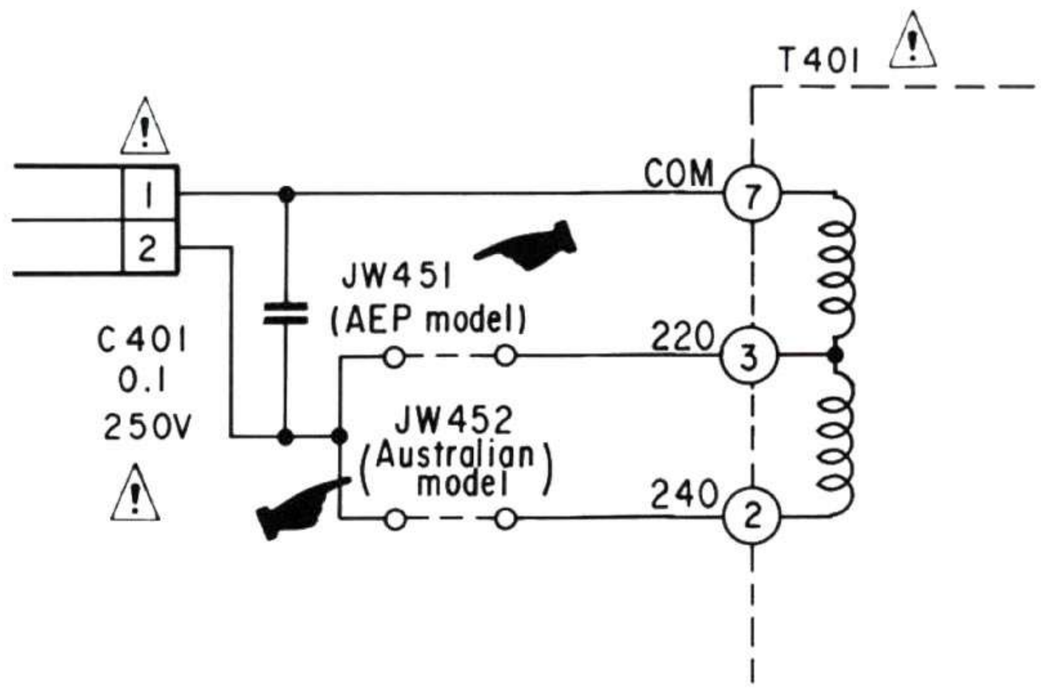

www.hifiengine.com